TRAFFIC IMPACT ASSESSMENT

FINAL REPORT

INTERSECTION OF
HIGHWAY 15:06 & RANGE ROAD 220
AND HIGHWAY 15:06 & RANGE ROAD 214

Submitted to:
SASOL CANADA HOLDINGS LIMITED

Our File No. CG55 36939

Prepared by:
Opus Stewart Weir Ltd

Calgary 5th Avenue Office
Suite 300, 926 - 5th Avenue SW
Calgary AB T2P 0N7
Canada

Telephone: +1 403 264 2585
Facsimile: +1403 264 2501

Date: January 2014

OPUS STEWART WEIR

TRAFFIC IMPACT ASSESSMENT

INTERSECTION OF
HIGHWAY 15:06 & RANGE ROAD 220
AND HIGHWAY 15:06 & RANGE ROAD 214

Submitted to:
SASOL CANADA HOLDINGS LIMITED

Prepared By: Basir Saleh, P. Eng., PTOE
Aftab Bhatti, P.Eng.

PROFESSIONAL ENGINEER ALBERTA
BASIR AHMED SALEH

Jan. 27, 2014

PERMIT TO PRACTICE
OPUS STEWART WEIR LTD.
Signature
Date January 27, 2014
PERMIT NUMBER: P 292
The Association of Professional Engineers, Geologists and Geophysicists of Alberta

EXECUTIVE SUMMARY

Opus Stewart Weir (OSW) has been commissioned by Sasol Canada Holdings Limited (Sasol) to prepare a Traffic Impact Assessment (TIA) report to assess the traffic impacts of its proposed Canada Gas-to-Liquids (GTL) Project on the surrounding roadway network. Sasol's development consists of a GTL facility, which will convert natural gas to liquid petroleum products. A phased approach will be adopted when constructing the facility; there will be two phases, each having an equivalent nominal design capacity of 48,000 barrels per day. The proposed construction phasing consists of 2018-2020 for the first phase, and 2022-2024 for the second and final phase.

The Canada GTL Project (the Project) will be located in Strathcona County in Alberta's Industrial Heartland (AIH). The project development area consists of approximately 526 ha and located about 4 km northeast of Fort Saskatchewan and 40 km northeast of Edmonton.

The primary intersection that is assessed in this TIA report based on the expected impact of the Project is Highway 15:06 & Range Road 220. The secondary intersection identified for assessment is Highway 15:06 & Range Road 214. The assessment contained in this report takes into account a 25-year horizon, starting in 2013 (the base year) and ending in 2038.

The purpose of this report is to assess the traffic impacts of the Project on the current configuration of both intersections, and to determine whether the traffic generated by the Project and surrounding developments will require upgrading of these two intersections.

For this TIA report, the portion of Highway 15:06 is located between the east City Limits of Fort Saskatchewan and Highway 830 S (Range Road 214). Highway 15:06 is a four-laned roadway from east City limits of Fort Saskatchewan to just east of Range Road 214. Hwy 15:06 is a controlled roadway at the intersections with Range Road 220 and Range Road 214 and provides access to agriculture to the south, and numerous oil/gas activities to the north, the largest of these being the Shell Scotford Plant.

The existing intersections of Hwy 15:06 with Range Road 220 and Range Road 214 are signalized, illuminated and have identical lane configurations.

OSW conducted traffic turning movement counts at the intersections of Highway 15 & Range Road 220, and Highway 15 and Range Road 214 on October 1, 2013. Based on discussions with Shell personnel, it was determined that the turning movement counts completed in October of 2013 includes Shell's current construction workforce for their Carbon Capture Plant under construction. As a result of their construction workforce being equivalent to their yearly turnaround staff for maintenance, it has been assumed that Shell's turnaround workforce is also accounted for in the projected background traffic volumes in the analyzed future scenarios.

In order to capture the existing and future developments within the surrounding area, a list of companies was compiled through discussions with Strathcona County and the Alberta Industrial Heartland Association (AIHA). OSW subsequently developed and distributed a survey questionnaire to all identified companies to obtain future traffic and development timeline information for operational, construction and turnaround staff. The information obtained through the questionnaire and follow-up discussions was then analyzed by comparing it with the Project's construction and

operations timelines, including the commencement of construction in 2018 construction season and the target horizon years (2018, 2023, 2028, 2033, and 2038). The future development traffic was calculated from the survey responses.

Using the existing geometry at both intersections, several scenarios were evaluated using the Sychcro 8 modeling program. Generally, it is desirable to maintain a minimum Intersection Level of Service (LOS) of "D" or better. Based on the existing and projected peak hour traffic volumes at Highway 15 and Range Road 220 and Highway 15 Range Road 214 intersections, both intersections will operate at an overall LOS of "C" or better, except in the year 2023 and 2033 at Range Road 214 intersection which will operate at LOS of "D" during the AM peak.

Instead of trying to determine the year the operation of the intersections may start to breakdown, OSW has reviewed other scenarios to determine how much more traffic the intersections could accommodate before dropping to a LOS of 'D' or 'E'. Using the 2023 traffic projections as a base year, the traffic volumes going to AIH were inflated by a constant rate until the level of service dropped below an acceptable level. It was determined that the 2023 AM Peak Hour traffic volumes would be able to accommodate an additional 50% going to the north without a change to the level of service. At 75%, it was determined that the Intersection of Range Road 220 (which is taking handling majority of the traffic for this study) would fall to a level of service 'F'. Results of this sensitivity analysis are included in Appendix 'K'.

Based on the above analysis and discussions with surrounding companies and Strathcona County officials, OSW submits the following recommendations to mitigate the traffic impacts of the Project:

- No Improvements to the Highway 15/Range Road 220 intersection prior to the commencement of the Project's construction in 2018.
- No Improvement to the Highway 15/Range Road 214 intersection prior to the commencement of the Project's construction in 2018.
- Range Road 220 is recommended to be twinned up to 200m north of Sasol's main entrance to accommodate the site generated traffic volumes destined to and from the Project site. The existing Range Road 220 is currently twinned 400m north of Highway 15, and an additional 1.4km of twinning will be required to accomplish this recommendation.
- Upgrading of Township 554 between Range Road 220 and west of Range Road 214, to 11m road width is recommended to accommodate expected Project-related vehicles through the north access. The anticipated length of upgrading is estimated to be 2.9km.
- The Project's access point located in the far NE corner should be upgraded to a Type 4A treatment to accommodate the construction traffic at this location.
- All other accesses to the Project site are recommended for Type 2A treatment to ensure vehicles going in and out of the site do not impede with the through traffic.
- All local roadway and access improvements are recommended to be implemented prior to the Project's first phase of construction.

The high-level cost estimate for the above-noted recommendations for upgrades the surrounding infrastructure is $11,900,000.

Table of Contents

EXECUTIVE SUMMARY....1

1 INTRODUCTION....5

2 BACKGROUND INFORMATION....6
2.1 Project Background....6
2.2 Sasol's Proposed Development....6
2.3 Highway....8
2.4 Study Area....8

3 EXISTING INFRASTRUCTURE & CONDITIONS....9
3.1 Existing Highway Conditions....9
3.2 Local Roads....9
3.3 Intersection Characteristics....10
3.4 Highway 15 & Range Road 220 Geometric Details....10
3.5 Highway 15 & Range Road 214 Geometric Details....11
3.6 Existing and Proposed Development....12
3.7 Existing Traffic Volumes and Growth Rate....15
3.8 Traffic Conditions (Existing)....16

4 TRAFFIC PROJECTIONS....18
4.1 Projected Background Traffic....18
4.2 Projected Development Traffic....18
4.3 Trip Generation....21
4.4 Trip Distribution....22
4.5 Combined Traffic Projections (Post development traffic)....23

5 CAPACITY ANALYSIS....26
5.1 Intersection Capacity Analysis – Synchro 8....26
5.2 Limitations....26
5.3 Synchro Model Inputs....26
5.1 Synchro Model Outputs....26
5.2 Discussion on the Results of Capacity Assessment....30

6 CONCLUSIONS....32

7 RECOMMENDATIONS....32

8 HIGH LEVEL COST ESTIMATE....33

APPENDICES:

Appendix A – Key Plan & Site Location/Local Roadway Network
Appendix B – Site Photos
Appendix C – Meeting Minutes with Alberta Transportation (Terms of Reference)
Appendix D – Geometric Information – Highway & Intersection Configuration
Appendix E – Stakeholder Questionnaire Survey
Appendix F – Alberta Transportation Traffic Information
Appendix G – 2013 Turning Movement Diagrams (AADT, AM Peak, PM Peak)
Appendix H – Trip Generation, Directional Split, & Peak Hour Tables
Appendix I – Existing, Background, and Combined Tables & Diagrams
Appendix J – Synchro Analysis
Appendix K –Sensitivity Analysis
Appendix L – Sasol's Site Plan (Prelim Access Points), Type 2A & Type 4A Intersection Layouts

1 INTRODUCTION

Opus Stewart Weir (OSW) has been commissioned by Sasol Canada Holdings Limited (Sasol) to prepare a Traffic Impact Assessment (TIA) report to assess the traffic impacts of its proposed Canada Gas-to-Liquids (GTL) Project (the Project) on the surrounding roadway network. The Project consists of a gas-to-liquids GTL facility which will convert natural gas to liquid petroleum products. The Project will be located in Strathcona County in Alberta's Industrial Heartland (AIH). The project development area consists of approximately 526 ha located about 4 km northeast of Fort Saskatchewan and 40 km northeast of Edmonton.

The primary intersection that will be analyzed based on the expected impact of the Project is Highway 15:06 & Range Road 220 intersection. The secondary intersection identified for analysis is Highway 15:06 & Range Road 214 intersection. The analysis will take into account a 25-year horizon, starting in 2013 (base year) and ending in 2038. This TIA report also takes into account future developments publicly disclosed to date within the region surrounding the Project that relate to the above-noted intersections.

The purpose of this TIA report is to assess the traffic impacts of the proposed developments on the current configuration of both intersections, and to determine whether the traffic generated by the Project and surrounding developments will require upgrading of these two intersections.

The scope of the TIA consists of the following:

- Conduct a review of current traffic volume data, including the October 2013 intersection turning movement counts at Highway 15/Range Road 220, and Highway 15/Range Road 214 intersections carried out by OSW staff.
- Meet with the Alberta Industrial Heartland Association (AIHA), and Strathcona County to identify projected development within the area of interest.
- Conduct a questionnaire survey of the surrounding companies to collect their development traffic projections for the area, and compile trip generation projections for the TIA.
- Estimate the projected background traffic volumes based on the most recent traffic count data available and applicable traffic growth rates.
- Estimate the future traffic volumes from the proposed developments within the area.
- Determine the post development traffic volumes for target horizon years within a 25-year timeframe.
- Complete intersection capacity analyses at Highway 15/Range Road 220, and Highway 15/Range Road 214 intersection for the following target horizons (2018, 2023, 2028, 2033, and 2038).
- Provide recommendations for any necessary improvements to the intersections to mitigate identified potential traffic impacts.

The projected workforce and traffic distribution information for the development within the area was completed through a questionnaire sent to identified companies operating in the area. Information regarding Highway 15 was sourced from site investigation, correspondence with Alberta Transportation (AT), Strathcona County, and the AIHA personnel, as well as, previous reports completed for the respective agencies within the area.

2 BACKGROUND INFORMATION

2.1 Project Background

In 2010, Strathcona County commissioned Stewart Weir to prepare a traffic impact assessment focused on the Highway 15/Range Road 220 intersection, in anticipation of the construction and operation of the proposed TOTAL E&P Upgrader, and to provide Shell with an upgraded secondary access to the Scotford complex. This traffic impact assessment included a number of recommendations regarding infrastructure upgrades. Subsequently, the Range Road, rail crossing and a segment of Range Road 220 north were upgraded in the summer/fall of 2012. The intersection now resembles that of Range Road 214 which has shown to have the capacity to handle large-scale construction workforces (10, 000 workers – on site peak Shell SE1).

The final terms of reference (TOR) for the Project's environmental impact assessment (EIA) require Sasol to undertake a TIA. In recognition of the traffic impact assessment undertaken for the Total Upgrader Project and the improvement to Range Road 220 subsequently carried out, OSW, on behalf of Sasol engaged in discussions with AT to confirm the terms of reference and scope of work for the Project's TIA. The meeting minutes with AT can be found in Appendix 'C', and are summarized as follows:

- AT requires a TIA report to specifically reflect Sasol's Project.
- Highway 15 and Range Road 220 was identified as the main intersection that will be utilized by the Project. Highway 15 and Range Road 214 is expected to see minimal construction traffic and has been identified a secondary access for construction.
- Dialogue and discussion with other stakeholders would be required to re-affirm their development and identify a timeframe to chronologically specify the traffic growth over a 25-year horizon with 2013 the base year and 2018, 2023, 2028 and 2038 target milestone years for analysis.
- The traffic volumes from other developments would be simply re-projected based on the Project's proposed development schedule as identified in the Project's regulatory Application. Discussion with Strathcona County was recommended with regards to identifying other developments within the area.
- Traffic generated by the proposed Project is not expected to use the Range Road 215 as identified in the Project's regulatory Application and therefore it was agreed that it would not be included in the TIA report capacity analysis along with other CN accesses.

2.2 Sasol's Proposed Development

Sasol Canada Holdings Limited is a division of Sasol Limited, a world leader in the commercial production of liquid fuels and chemicals from coal and natural gas.

The Canada GTL Project will be the first gas-to-liquids facility in Canada. As a multi-billion dollar investment, the facility will create a new industry for Canada, help diversify the Alberta economy and

create new employment opportunities. GTL is a proven technology that harnesses clean, abundant natural gas resources to make higher-value petroleum products.

The rapid growth in North American gas production presents exciting opportunities for GTL technology to add value to the continent's abundant natural gas resources. GTL is an ideal monetization opportunity for natural gas producers. As improved production technology continues to increase the supply and depress the price of natural gas, the price differential between natural gas and oil has widened considerably. GTL is able to take advantage of this differential by producing oil-equivalent fuels from natural gas feedstock, unlocking the full value of natural gas.

The Project will convert natural gas to three liquid petroleum products: GTL diesel, GTL naphtha and liquefied petroleum gas (LPG). The facility will have a nominal design capacity (defined as an approximation of the projected annualized facility capacity) of 96,000 barrels per day of combined production. A phased approach will be adopted when constructing the facility; there will be two phases, each having an equivalent nominal design capacity of 48,000 barrels per day. The proposed construction phasing consists of 2018-2020 for the first phase, and 2022-2024 for the second and final phase. The facility's primary components include:

- natural gas reforming (auto thermal reforming)
- Fischer-Tropsch (FT) synthesis
- product upgrading (hydrocracking, hydrotreating, distillation, isodewaxing)
- oxygen production
- hydrogen production (steam methane reforming)
- power generation
- utilities
- supporting infrastructure

The proposed development site is in Strathcona County in AIH, an area zoned for heavy industrial development. The project development area is approximately 526 ha located about 4 km northeast of Fort Saskatchewan and 40 km northeast of Edmonton. The development location is as follows:

- Section 19, Township 55, Range 21, West of the Fourth Meridian (19-55-21, W4M)
- the west half of Section 20
- the north half and south half of Section 18
- the northwest quarter section of Section 17, Township 55, Range 21, West of the Fourth Meridian (NW17-55-21, W4M)

During the construction phases, Sasol will undertake a number of measures to reduce traffic impacts, including:

- majority of the workforce is anticipated to be transported by bus services on a daily basis.
- consideration towards limiting the number of private vehicles allowed on site
- staggered shift schedules, and scheduling of deliveries during off-peak periods
- use of two site entrances to distribute construction traffic over different roadways.
  The two site entrances will be accessed via Range Road 220 and Range Road 214/Township Road 554

2.3 Highway

Vehicular access into the GTL facility will be provided from Highway 15:06 & Range Road 220. From this intersection, vehicles will travel north on Range Road 220 to access the site. During the construction phases, access to site for a small portion of equipment vehicles will be provided from the intersection of Highway 15:06 and Range Road 214. From this intersection vehicles will travel north on Range Road 214, and utilize Township Road 554 for access to the north side of the site.

According to Alberta Transportation's Road Classification Map (2008), Highway 15:06 is classified as a level 2 Highway.

2.4 Study Area

For illustration purposes refer to the key plan and location plan in Appendix 'A'. The study area is situated west of Range Road 214 and east of Range Road 220, and just north of Highway 15:06.

3 EXISTING INFRASTRUCTURE & CONDITIONS

Opus Staff conducted a site visit on October 26th 2013 and November 17th 2014. Refer to Appendix 'B' for site photos.

3.1 Existing Highway Conditions

Highway 15:06 commences at the East City Limits of Fort Saskatchewan (km 0.000) and proceeds east towards Bruderheim, ending at km Highway 45 (km 14.100). The Capital Region Board's Integrated Regional Transportation Master Plan classifies Highway 15 as an expressway.

As a major provincial highway, Highway 15:06 transitions from four lane divided to two-lane undivided highway east of Range Road 214 and is oriented in a southwest – northeast direction. For this study, the portion of Highway 15:06 is located between the East City Limits of Fort Saskatchewan and Highway 830 S (Range Road 214). Highway 15:06 is a four-laned roadway from East City limits of Fort Saskatchewan to just east of Range Road 214. Hwy 15:06 is a controlled roadway at the intersections with Range Road 220 and Range Road 214 and provides access to agriculture to the south, and numerous oil/gas activities to the north, the largest being the Shell Scotford Plant. Highway 15:06 connects the users to Hwy 21 to the south west (Fort Saskatchewan) and Hwy 29 to the east (Lamont).

The posted speed limit on Hwy 15:06 is a 100 km/h which is reduced to 80 Km/h as the intersection approaches. The terrain within the area is relatively flat and the vertical grades along this section are within 0.3% range. Hwy 15:06 is paved with 3.7m wide lanes and 3.0 m shoulders. The existing right of way of Highway 15:06 varies, and is approximately 100m wide within the intersections of interest. The pavement condition and pavement marking in the vicinity of the study location were found to be in good condition during the OSW site visit. Refer to appendix "C" for geometric details of Highway 15:06 within the intersections of interests.

3.2 Local Roads

For the most part, the existing local roads in Strathcona County's portion of AIH can be characterized as 8-m wide gravel or oiled surface roads in 20 meter right of ways, which generally follows the original township road system. The following include the exceptions around the Project development area:

- Range Road 220 between Highway 15 and Township road 560A, has been upgraded to 11-meter wide paved two-lane road in a 40 – 50 meter right of way. It should also be noted that Range Road 220 is currently a divided four lane roadway from Highway 15 to approximately 600m to the north. Range Road 220 south of Highway 15 consists of a gravel surface.
- Range Road 214 between Highway 15 and Township Road 560, is a four lane divided roadway with a 50-55 meter right of way. Range Road 214 between Township Road 560 and Township Road 560A, is currently 11-meter wide two lane road in a 50 meter wide right of way.
- Township Road 554 is currently 7m roadway with no defined cross-section.

The speed limit on these roadways is 80km/h. The intersection of Hwy 15:06 & RR 220 is the east boundary of Fort Saskatchewan's corporate limits. These roadways provide service to various oil and

gas activities, agriculture, and local residents. Refer to Appendix 'A' (location plan) for details of roadway network surrounding the development site.

3.3 Intersection Characteristics

The existing intersections of Hwy 15:06 with RR 220 and RR 214 are signalized, illuminated and have identical lane configurations. Geometric details of both intersections can be found in Appendix 'D'.

Both intersections are situated on a tangent section of Highway 15:06, and the terrain within the area is relatively flat with adequate sight distance (>1000m). The existing signal timing was obtained from AT; however, the data was found to be incomplete upon review. In discussion with AT and Strathcona County officials, no geometric and operational concerns where noted at this intersection. The intersection of Highway 15 and Range Road 220 was constructed in 2012.

The following information is based on site investigation, existing plans, data and correspondence obtained from AT and Strathcona County. The intersection treatment at the intersections of Highway 15:06 with Range Road 220 and Range Road 214 consist of:

- Eastbound lane - dual left turning lanes
- Eastbound - two through lanes
- Eastbound right turning taper for deceleration & acceleration (for minor intersecting roads)
- Westbound lane - one left turning lane
- Westbound - two through lanes
- Westbound lane - right turning lane & taper for deceleration & acceleration (for major intersecting roads)
- Southbound lane - shared lane (left + through)
- Southbound - two right turning free acceleration lanes
- Northbound lane - shared lane (left + through + right)

3.4 Highway 15 & Range Road 220 Geometric Details

Hwy 15:06 is paved with 3.7m wide lanes and 3.0 m shoulders. The Intersection Sight Distance is in excess of 1000m in both directions. The average width of median on west side of Hwy 15:06 & RR 220 intersection is 35m and median width on the east side of this intersection is 45m. The following is a summary of the existing intersection treatment:

- Eastbound lanes right turn
    - deceleration: 87.5m, 25:1 taper
    - acceleration: 87.5m, 25:1 taper
- Eastbound lanes left turn
    - deceleration: 617m (median)/907m (inside), 30:1 taper and parallel 3.5m dual left turn lanes; 0.5m shoulder
    - acceleration: none
- Westbound lanes right turn
    - deceleration: 250m, 40:1 taper and parallel 3.5m right turn lane; 1.5m shoulder

- acceleration: 240m (outside) / 480m (inside), 40:1 taper and parallel 3.5m dual right turn free lanes; 1.5m shoulder

- Westbound lanes left turn
  - deceleration: 220m, 40:1 taper and parallel 3.5m right turn lane; 0.5m shoulder
  - acceleration: none

Figure 3.2a: Hwy 15:06 & Rge. Rd. 220 Intersection

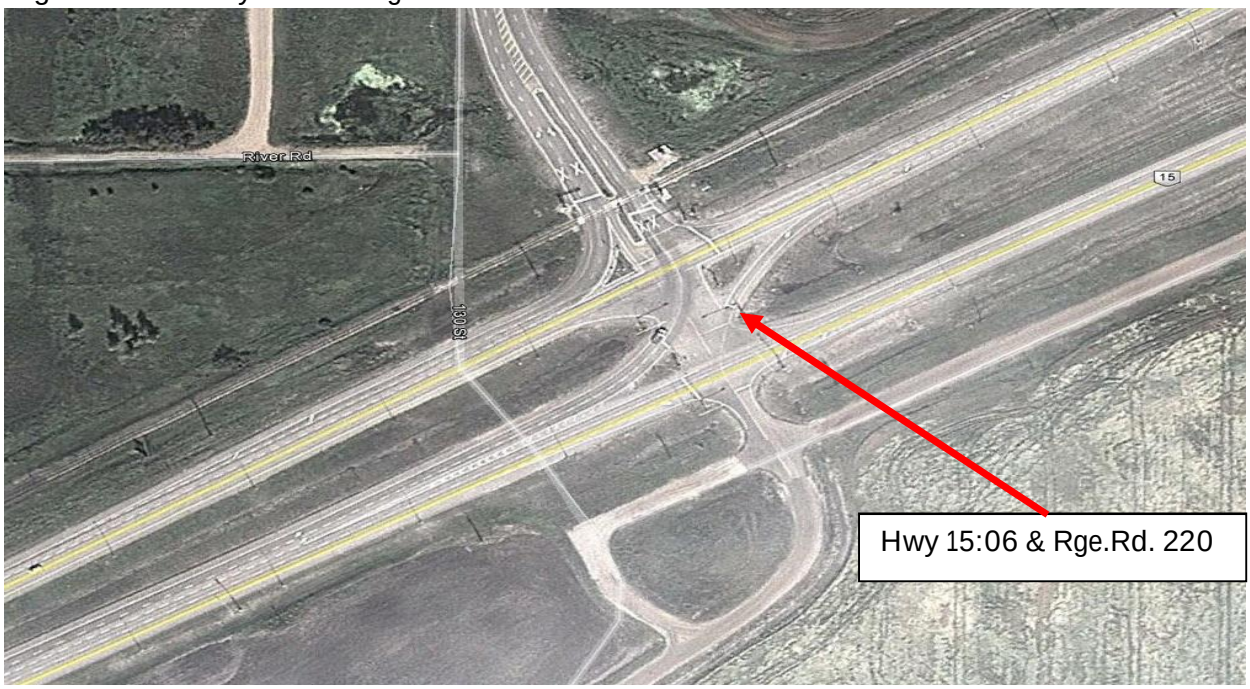

3.5 Highway 15 & Range Road 214 Geometric Details

Hwy 15:06 is a paved with 3.7m wide lanes and 3.0 m shoulders. The intersection sight distance is in excess of 1000m in both directions. The average width of median on west side of Hwy 15 & RR 214 intersection is 40m and median width on the east side is 45m. The following include details of existing intersection treatment:

- Eastbound lanes right turn
  - deceleration: 250m, 25:1 taper
  - acceleration: 250m, 25:1 taper

- Eastbound lanes left turn
  - deceleration: 550m (median) / 850m (inside), 40:1 Taper and parallel 3.5m dual left turn lanes; 0.5m shoulder
  - acceleration: None

- Westbound lanes right turn
  - deceleration: 220m, 40:1 taper and parallel 3.5m right turn lane; 1.5m shoulder

- acceleration: 240m (outside) / 480m (inside), 40:1 taper and parallel 3.5m dual right turn free lanes; 1.5m shoulder (turning right from SB to WB)

- Westbound lanes left turn
  - deceleration: 220m, 40:1 Taper and parallel 3.5m right turn lane; 0.5m shoulder
  - acceleration: none

Detail of existing intersection geometry can be found in Appendix 'D'.

Figure 3.2b: Hwy 15:06 & Rge. Rd. 214 Intersection

3.6 Existing and Proposed Development

The intersections currently provide access to numerous oil and gas companies to the north, and predominantly agriculture and local access to the south. Refer to Appendix 'A' (location plan) for map of the existing lease holders within AIH. The significant user of both intersections to the north consists of Shell and their Scotford Complex. The major developers currently operating in the area and using the intersections are as follows but not limited to:

- Shell Canada
- Air Liquide
- DOW Chemicals
- ATCO Energy/ATCO Power
- Aux Sable
- CN Oil and Gas Logsitics Yard
- CP Strathcona Logistics Yard
- Keyera Energy
- Hydro Scotford Inc.
- Western Hydrogen Ltd.
- Taurus Industrial Park
- Suncor

It has been assumed that all traffic volume generated from all existing developments has been captured in the traffic count undertaken in October of 2013. Shell's current construction workforce for their Carbon Capture Plant was also captured in the undertaken traffic count. In discussion with Shell, their existing construction force is equivalent to the yearly turnover staff for maintenance purposes. Therefore, it is also assumed that Shell's turnover workforce is accounted in the base year traffic count and hence in background flows in future years.

In discussion with Strathcona County and the AIHA officials, the following developments were identified as "potential" within AIH. The area to the south of Highway 15 was identified as agricultural land for the purposes of this study in discussions with Strathcona County staff.

- Air Products: Proposing a Hydrogen Plant. Air Products has been chosen by Northwest Upgrader Refinery to supply Hydrogen for their plant. Construction is anticipated to start in 2014 and anticipated completion is expected to be October 2015.
- ATCO Power: Proposing to build and operate a 400 megawatt (MW) natural gas-fired power generation station called the ATCO Heartland Generation Station in Strathcona County. The power generation station will use clean and efficient natural gas-fired combined cycle technology that will produce enough electricity to power approximately 400,000 homes. Construction for the facility is expected to start in late-2014 with full operation expected in 2017.
- Keyera Energy – Proposing a 30,000 barrel per day de-ethanizer which will allow Keyera to process an ethane-rich stream of NGL's for delivery to petrochemical producers in Alberta and a propane-rich stream of NGL's for delivery into Keyera's fractionation facilities.
- Williams Energy (Canada) Inc.: Proposing Propane De-hydrogenation (PDH) polymer grade propylene for plastics ($900M). Construction is expected to commence in 2014 and the anticipated facility will be operational by early 2016.
- Plain Midstream Canada ULC: Has recently purchased additional land to the east and southeast quadrant of their existing location. A $500 million facility is being proposed with construction expected to start in 2016 and to be completed in 2018.
- Sasol Canada Holdings Ltd: The Canada GTL Project will be built on land formerly owned by TOTAL E&P Canada for an Upgrader project. Construction of phase 1 of the Canada GTL Project is expected to start in 2018 with operation startup in 2021. Construction of phase 2 is anticipated to start in 2022 and completed in 2024. Each phase will have a design capacity of 48,000 barrels per day, and overall 96,000 barrels per day.
- Trans Canada Pipelines: Terminals will facilitate the efficient movement of crude oil from northern Alberta and provide connection to access markets elsewhere. The proposed development will be situated on 320 acres of land owned by Trans Canada and will consist of six crude oil storage tanks with a total storage capacity of 1.9million barrel. Anticipated year of construction is unknown at the moment.
- Pembina Marketing Ltd: As of September 2013, purchased additional land (Gulf Chemical) to support future development of rail, terminal lines and storage facilities. Pembina has entered into a multi-year agreement with a major North American Refiner for the provision of services to load crude oil railcars within their existing site. No definitive plans have been identified to date.

- MEG Energy: MEG Energy has purchased 1200 acres of Statoil land in May 2013 for future development. Development of this site is not anticipated over the next 25 years and outside of study area.
- BA Energy: No concrete plan for development has been identified to date and outside of study area.

In discussion with Strathcona County and the AIHA, a survey questionnaire was submitted to surrounding companies north of Highway 15, to obtain future traffic projections (operational staff, construction staff, and turnover staff), construction timelines, and intersection utilization within the area. Refer to Appendix 'E' to review the sample questionnaire submitted to the identified companies.

3.7 Existing Traffic Volumes and Growth Rate

The historical traffic informations for Highway 15:06 are available from the Alberta Transportation Website. Based on historical traffic data, the traffic volumes in this area fluctuated significantly with development of new facilities in the Scotford area in 2006 – 2007. As a result, there appears to be an abnormal increase in traffic volumes between 2006 and 2007. Therefore, for the purposes of this report the traffic volumes from 2007 to 2012 data have been utilized to calculate the growth rate as a consideration to the fluctuation.

Table 3.5a: Historical Traffic Volumes – E OF RGE RD 220 – Av. Linear Growth Rate = 1.09%

Year	2007	2008	2009	2010	2011	2012
AADT	11520		11560	11730	11910	12150

Table 3.5b: Historical Traffic Volumes – W of RR 215A WJ – Av. Linear Growth Rate = 1.13%

Year	2007	2008	2009	2010	2011	2012
AADT	11500	11050	11560	11730	11910	12150

Table 3.5c: Historical Traffic Volumes – E of RR 215A WJ – Av. Linear Growth Rate = 1.13%

Year	2007	2008	2009	2010	2011	2012
AADT	11470	11020	11510	11700	11880	12120

Table 3.5d: Historical Traffic Volumes – W of RR 215 EJ – Av. Linear Growth Rate = 1.13%

Year	2007	2008	2009	2010	2011	2012
AADT	11470	11020	11510	11700	11880	12120

Table 3.5e: Historical Traffic Volumes – E of RR 215 EJ – Av. Linear Growth Rate =1.12 %

Year	2007	2008	2009	2010	2011	2012
AADT	11430	11010	11500	11690	11870	12070

Table 3.5f: Historical Traffic Volumes – W of 830 to N OF Josephburg –
Av. Linear Growth Rate = 1.12%

Year	2007	2008	2009	2010	2011	2012
AADT	11430	11010	11500	11690	11870	12070

By taking the average of these six distinct growth rates along Highway 15:06, an average of 1.12% was determined as a growth rate within this area. For the purpose of this TIA report, a growth rate of 2% was assumed for the purpose of obtaining background traffic volumes. The growth rate was only applied to the traffic to and from east, west and south at the intersections of Highway 15 and Range Road 220 and Range Road 214.

The growth rate was not applied to the traffic to and from north at the intersections of Highway 15 and Range Road 220 and Range Road 214 as the future development traffic information was obtained through the survey questionnaire.

3.8 Traffic Conditions (Existing)

OSW conducted traffic turning movement counts at the intersections of Highway 15 & Range Road 220, and Highway 15 and Range Road 214 on October 1, 2013. The estimated average daily traffic (ADT) along with the observed AM peak, and PM peak hour traffic volumes are summarized in the following diagrams. Refer to Appendix 'E' for details of the turning movement counts and vehicle composition at the intersections.

Figure 3.8a: Estimated 2013 Existing ADT

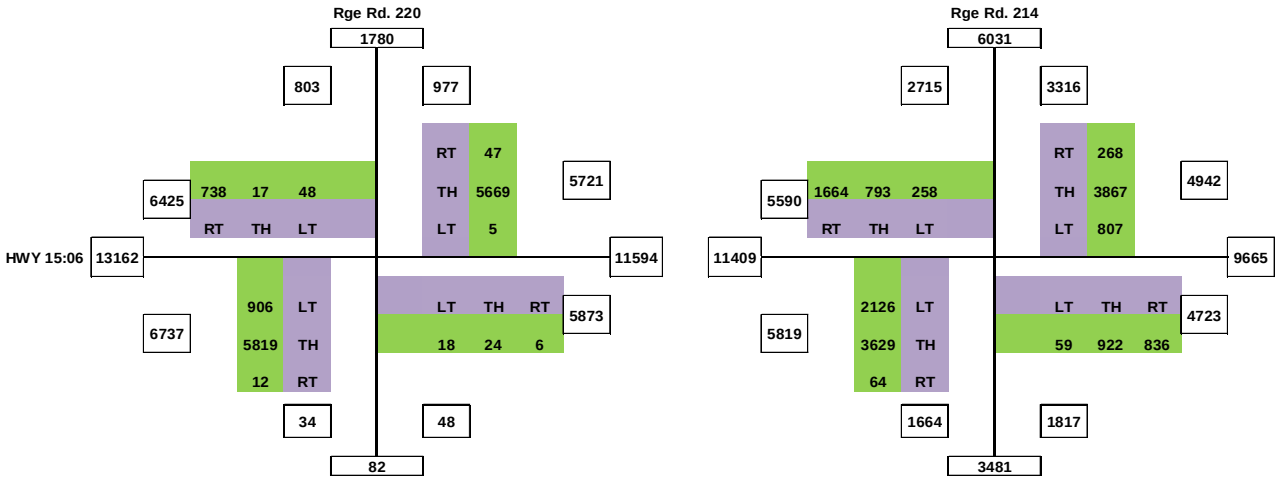

Figure 3.8a: 2013 Existing AM Peak Traffic Volumes

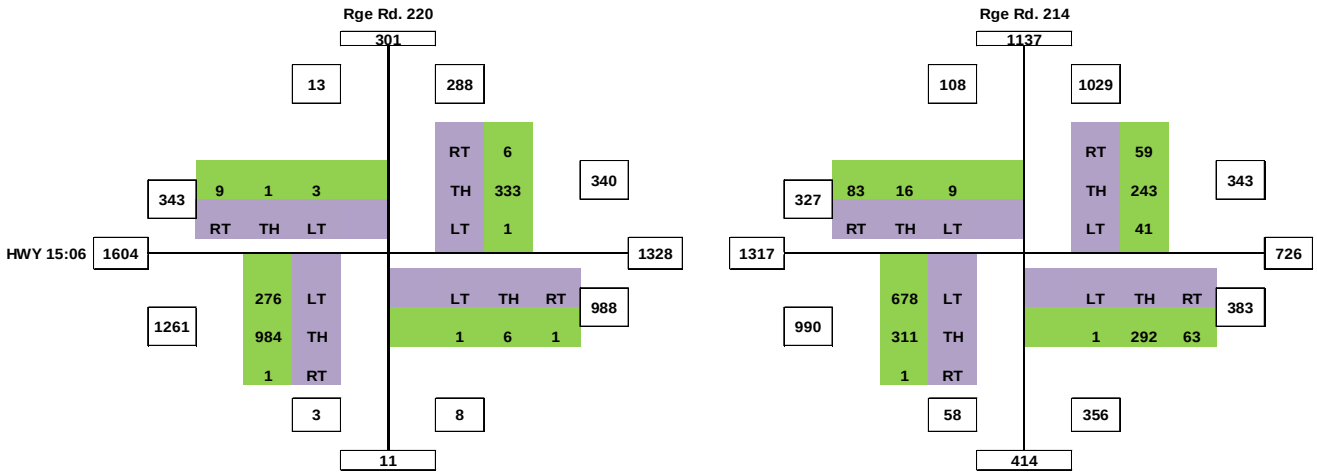

Figure 3.8a: 2013 Existing PM Peak Traffic Volumes

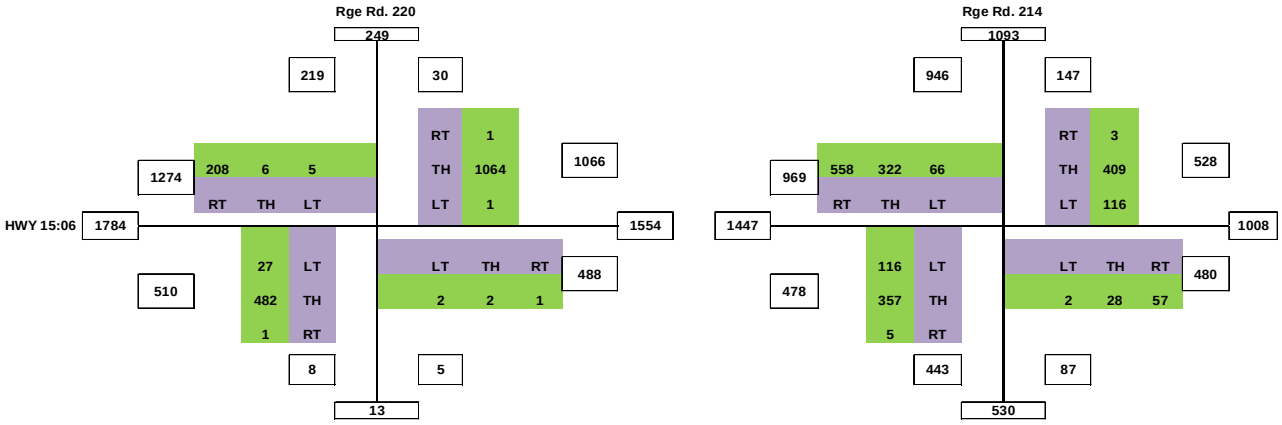

The existing turning movement counts indicate significant traffic volumes to and from north into the Strathcona Industrial Heartland Area from Highway 15. The traffic heading north into this area is, for the most part, composed of operational staff for existing facilities.

Based on discussions with Shell personnel, it was determined that the turning movement counts completed in October of 2013 includes Shell's current construction workforce for their Carbon Capture Plant under construction. As a result of their construction workforce being equivalent to their yearly turnaround staff for maintenance, it has been assumed that Shell's turnaround workforce is also accounted for in the projected background traffic volumes in the analyzed future scenarios

4 TRAFFIC PROJECTIONS

4.1 Projected Background Traffic

As previously discussed, the October 2013 traffic count indicated a fairly significant volume of traffic going north into AIH from Hwy 15.

For the purposes of this TIA report as it relates to background traffic, it has been assumed that the traffic generated by existing facilities will remain relatively constant, and the construction traffic will vary depending on how much development is under way at any given time. Therefore, in order to more accurately calculate the projected background traffic volumes for future years (2018 (construction), 2023, 2028, 2033, 2038) it was determined that the annual traffic growth rate should not be applied to the existing traffic heading north into the Strathcona's Industrial Heartland Area. All the traffic travelling, either in or out of this area, was removed from the existing turning movement diagrams for both intersections.

For example this means that in removing the southbound right-turning traffic volume from the Range Road 214 turning movement diagram also required the removal of the same volume of traffic from the westbound through movement on the Range Road 220 turning movement diagram. Similarly, removing the eastbound left-turning traffic volume from the Range Road 214 turning movement diagram also required the removal of the same volume of traffic from the eastbound through movement on the Range Road 220 turning movement diagram.

The remaining traffic volumes at each intersection are referred to as the "Background Traffic", and utilizing a 2.0% annual growth rate was used to calculate the estimated background traffic volumes for future years (2018 (commencement of the Project construction) and 2023, 2028, 2033, 2038).

The traffic data that was removed was added back in the "Background Traffic" as the "Modified Background Traffic". Refer to Appendix 'H' for details of the modified background traffic with respect to the different years of analysis for the AM and PM peaks.

4.2 Projected Development Traffic

This TIA report directly analyzes the intersection of Highway 15:06 and Range Road 220 as the primary access to the Project site, and Highway 15:06 and Range Road 214 as the secondary access. This required that future traffic generated in the area of these two intersections to be accounted for.

The Project's construction is expected to commence in the first half of 2018 with the first phase operations to start 2021. The second phase of the construction is anticipated to start in 2022 with operations commencing in 2024. In addition to the Canada GTL Project, other stakeholders within the area have also submitted project applications for new projects or expansions to existing operations with AIH. The traffic impacts of these projects are discussed in the following sections.

In order to capture the existing and future developments within the surrounding area, a list of companies was compiled through discussions with Strathcona County and the AIHA. OSW subsequently developed and distributed a survey questionnaire to all identified companies to obtain future traffic and development timeline information for operational, construction and turnaround

staff. The information obtained through the questionnaire and follow-up discussions was then analyzed by comparing it with the Project's construction and operations timelines, including the commencement of construction in 2018 construction season and the target horizon years (2018, 2023, 2028, 2033, and 2038). The future development traffic was calculated from the survey responses. The table below contains the information obtained through the questionnaire follow up phone call discussions, and third-party responses.

Table 4.2: Sasol Stakeholder List

SASOL TIA - Stakeholder List					
Company		Response			
		Yes	No	Other	Remarks
1	Air Liquide	X			2017 Construction (assumed). No turnaround required. Service surrounding development.
2	ATCO Energy	X			Assume 2015 Construction. Turnaround every 2 to 4 years.
3	ATCO Power	X			Construction 2015. Turnaround every 5 years.
4	Aux Sable	X			5 projects from 2016 - 2022. Turnaround every 2 years.
5	Dow Chemical	X			Fully operational. No anticipated plan. 2020/2028 anticipated turnaround.
6	Hydro Scotford Inc.		X		Existing operation included. No anticipated development noted.
7	Keyara Energy	X			2014 construction. No turnaround required.work done during none peak.
8	Pembina Marketing			X	Contacted on numerous occasion. No definitive plan identified to date.
9	Plans Midstream			X	Contacted on numerous occasion. No definitive plan identified to date.
10	Sasol Canada Holding Ltd	X			2 phase construction (2018-2020, 2022-2024). Turnaround every 4 years.
11	Shell Canada Ltd.	X		X	No development was identified over the next 25 years.
					Annual turnaround traffic captured in October 2013 traffic count.
12	Tauras Industrial Park	X			Growth captured in horizon years. No turnaround is required.
13	Trans Canada Pipelines Ltd.			X	Contacted on numerous occasion. No definitive plan identified to date.
					Third party information feedback indicated low traffic volumes as it is a terminal station.
14	Western Hydrogen Ltd.	X			2018 construction for Pilot project. No turnaround is required.
15	Williams Energy Canada	X			2014-2015 construction. Operation in late 2015.
16	Air Products	X			Construction in 2014-2015. Turnaround every 4 years. (2023)
17	CP Rail	X			Proposed growth accounted for. Based on confidentiality not much information was not attainable.
18	CN	X			Proposed growth accounted for. Based on confidentiality not much information was not attainable.
19	SUNCOR			X	Metering station and unmanned. Excluded from study.
20	Petrogas			X	Not interested in participating

The following assumptions and observations for this TIA report are based on the information received and analyzed by OSW.

- Traffic volumes generated from all existing developments were captured in the traffic count undertaken in October of 2013.
- Shell's current construction workforce numbers for its Carbon Capture Plant were also captured in the October 2013 traffic count. Shell's existing construction force is equivalent to the yearly turnover staff for maintenance purposes. Therefore, the TIA report assumes that Shell's turnover workforce is accounted in the base year traffic count and hence in the future background traffic volumes.
- For background traffic, a 2% growth rate was applied to the east, west, and south movements only. The traffic going to AIH has been held constant for future horizons, as the future development traffic has been captured by the survey questionnaire.

- Companies that were surveyed for information were identified through meetings with Strathcona County and AIHA.
- Where Average Daily Traffic (ADT) was not provided during consultation with companies, a *No of employees*2*0.8*, formula was applied to obtain the ADT. This formula is considered to be the common "practice" for this area and accounts for carpooling and bus services where applicable.
- Based on the 2010 traffic impact assessment undertaken for the TOTAL Upgrader Project, a K-factor of 25% was assumed for peak hour traffic determination from the ADT.
- The directional split (In, Out) for the AM (90/10) and PM (10/90) peak development traffic was assumed.
- In-line with the 2010 TIA, the following north turning movement distribution was assumed at the intersection of Highway 15 & Range Road 220:
    - Incoming: 80% from the west, 1% from the south, and 19% from the east
    - Outgoing: 80% to the west, 1% to the south, and 19% to the east
- In-line with the 2010 TIA, the following north turning movement distribution was assumed at the intersection of Highway 15 & Range Road 214:
    - Incoming: 70% from the west, 25% from the south, and 5% from the east
    - Outgoing: 70% to the west, 25% to the south, and 5% to the east
- The majority of the planned developments within the area are scheduled to occur prior to the commencement of the Project's construction in 2018.
- Through dialogue among companies and stakeholders with AIH, proactive communication and coordination are occurring for scheduling of turnaround activities, to achieve efficiencies because on the need to utilize the same workforce pool.
- For purposes of analyses, Turnaround traffic is assumed to be over the entire year, even though the maintenance work may only take 2 to 6 weeks and staggered due to the utilization of the same workforce pool.
- For the Project's first phase of construction, the 2019 average daily traffic was noted to be 2280 vehicles. This number was moved to the 2018 analysis year to capture worst case scenario for the first phase of construction.
- BA Energy and MEG Energy were not included in the company survey list as their operations do not directly affect the two intersections of interest in this TIA report. Through discussions with Strathcona County officials, OSW also determined that neither company has identified +20 year plans.
- The projected traffic volumes portray a snap shot of identified companies' future plans as currently known.
- Consultation with CN Railway was undertaken. However, future plans and projections were not shared. CN reiterated that its rail activities predominately occur during non-peak times to avoid impact to the two intersections assessed.

4.3 Trip Generation

As noted in the Strathcona Area Industrial Heartland Transportation Study Update, traffic generation from the area is separated into three types.

1. Operational Traffic: Once the development has been constructed, this traffic will generate for the life of the development. Operational staff includes everything from administration staff, plant workers and delivery trucks. This volume of traffic will remain constant for each individual development as they are completed.

2. Construction Traffic: Depending on the type of development, the construction traffic can vary substantially. Due to the high number of workers during construction, transport of workers through buses is capitalized and carpooling is expected. In discussion with Shell, transport of workers through buses (90%) is heavily capitalized due to the limited parking locations on site.

3. Turnaround (Maintenance) Traffic: Periodic maintenance will be required on plants and other various developments. Plant down time is not likely to occur all at the same time, especially within the same company. Busing and carpooling is anticipated.

Projected trip generations were established through the stakeholder consultation which included, survey questionnaire, phone call discussions, and third party information. Projected traffic volumes for daily operations, construction, and turnaround were identified and formulated into a table, as well as the year of the expected activity (construction, operation, and turnaround). From this information, a basis of traffic generation was formed and captured in line with Sasol's development.

The table below summarizes operation, turnaround and construction average daily trip generation calculated from the responses to the questionnaire survey conducted through the stakeholder consultation.

Table 4.2: Projected Development Traffic Generation (ADT)

SASOL TIA - Projected Development Traffic Generation (ADT)

Company (Average Daily Traffic)	2018				2023				2028				2033				2038			
	C	O	T	Total	C	O	T	Total	C	O	T	Total	C	O	T	Total	C	O	T	Total
Air Liquide		80		80		80		80		80		80		80		80		80		80
ATCO Energy		10		10		10	50	60		10		10		10		10		10		10
ATCO Power		46		46		46		46		46		46		46	120	166		46		46
Aux Sable	200	60	150	410		80		80	260	80	100	440				0		80	200	280
Dow Chemical				0				0			300	300				0				0
Keyara Energy		80		80		80		80		80		80		80		80		80		80
Sasol Canada Holding Ltd	2280			2280	2320	1670		3990		1850		1850		1850	800	2650		1850		1850
Shell Canada Ltd.				0				0				0				0				0
Tauras Industrial Park		50		50		80		80		80		80		80		80		80		80
Western Hydrogen Ltd.		20		20		20		20				0				0				0
Williams Energy Canada		128		128		128		128		128		128		128		128		128		128
Air Products		20		20		20	160	180		20		20		20		20		20		20
CP Rail		36		36		16		16		8		8		8		8		8		8
CN		8		8		8		8		8		8		8		8		8		8
Total Vehicles (ADT)	2480	538	150	3168	2320	2238	210	4768	260	2390	400	3050	0	2310	920	3230	0	2390	200	2590

C - Construction
O - Operation
T - Turnover

4.4 Trip Distribution

The traffic from developments within the area will access Highway 15 or Highway 830, via a variety of Range Roads and Township Roads. The following traffic distribution table illustrates the percentages of traffic distribution between Range Road 220, Range Road 214, and other intersecting roadways on Highway 15. The information below was attained through dialogue with stakeholders and third party inquiry.

Table 4.3: Projected Development Traffic Distribution by Percentage

Company	Percent Distribution		
	Hwy 15:06 & Rge. Rd. 220	Hwy 15:06 & Rge.Rd. 214	Other
Air Liquide	0%	100%	0%
ATCO Energy	10%	70%	20%
ATCO Power	0%	90%	10%
Aux Sable	90%	0%	10%
Dow Chemical	25%	0%	75%
Keyara Energy	100%	0%	0%
Sasol Canada Holdings Inc.	90%	10%	0%
Shell Canada Ltd.	25%	70%	5%
Tauras Industrial Park	30%	20%	50%
Western Hydrogen Ltd.	100%	0%	0%
Williams Energy Canada	85%	10%	5%
Air Products	90%	10%	0%
CP Rail	50%	40%	10%
CN	20%	30%	50%

The details of stakeholder development traffic with regards to trip generation, distribution, directional split, and estimate Peak Hour traffic for the horizon years can be found in Appendix ‘H’.

4.5 Combined Traffic Projections (Post development traffic)

The following diagrams show the estimated combined daily traffic volumes obtained by adding the projected background traffic and development traffic at the intersections for the AM and PM peak for the six different scenarios (existing (2013), 2018, 2023, 2028, 2033, and 2038).

Figure 4.4a: 2013 Existing AM and PM Peak

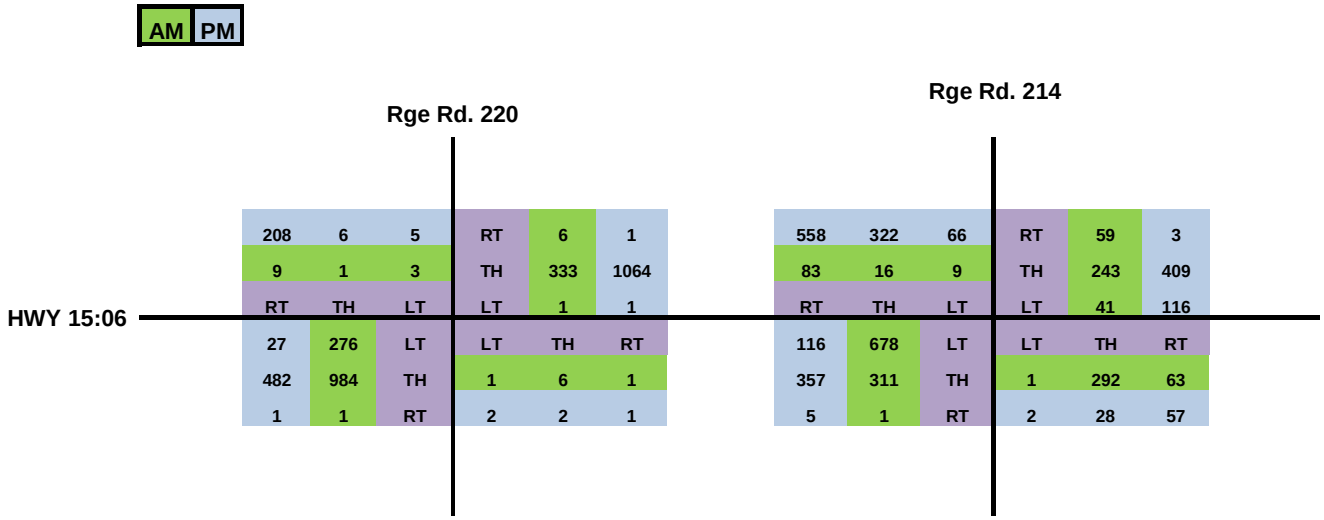

Figure 4.4b: Combined Traffic Forecast in 2018 Horizon AM and PM Peak

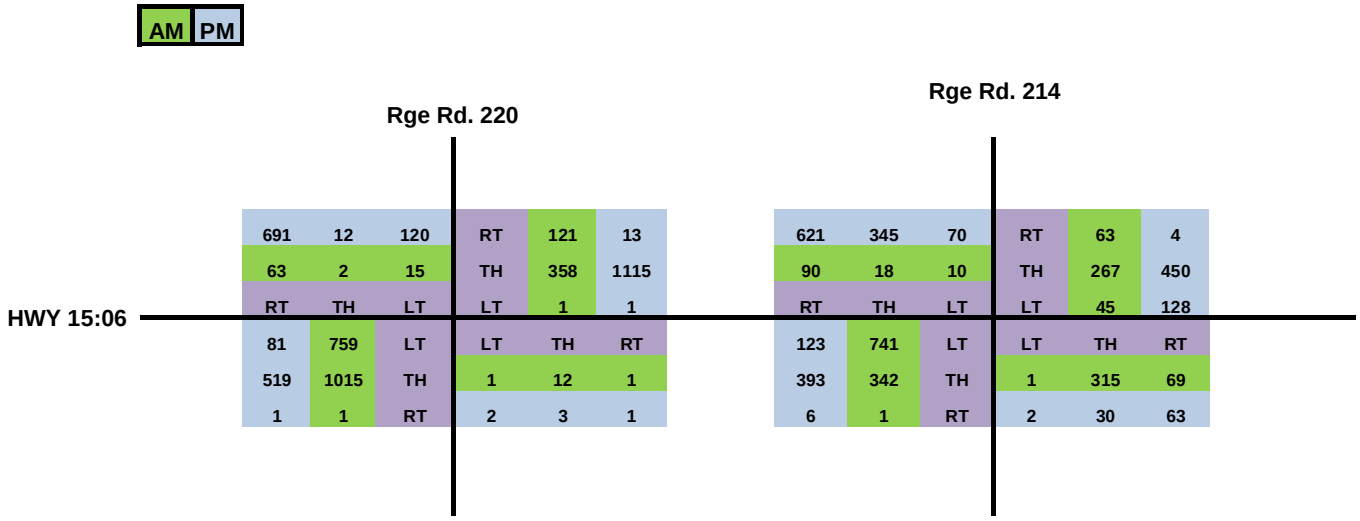

Figure 4.4c: Combined Traffic Forecast in 2023 Horizon AM and PM Peak

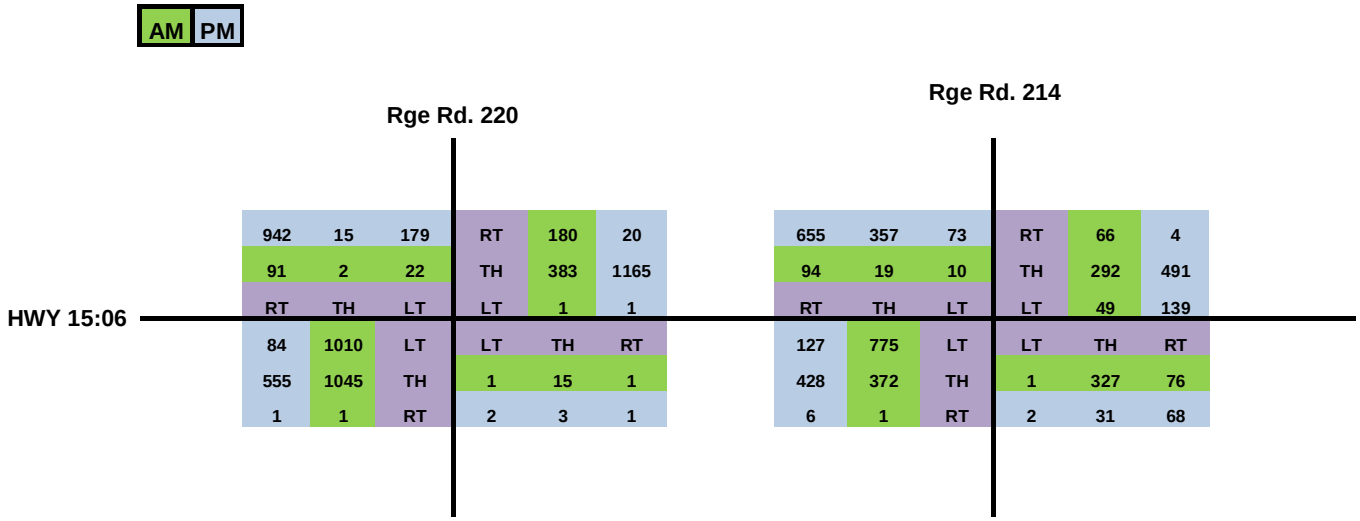

Figure 4.4d: Combined Traffic Forecast in 2028 Horizon AM and PM Peak

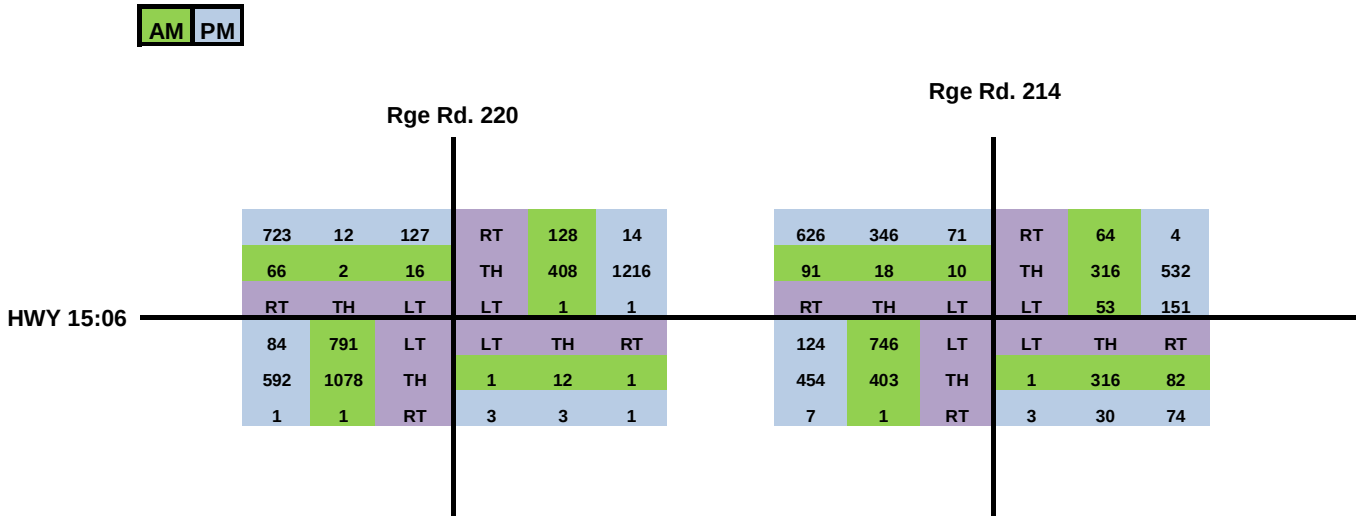

Figure 4.4e: Combined Traffic Forecast in 2033 Horizon AM and PM Peak

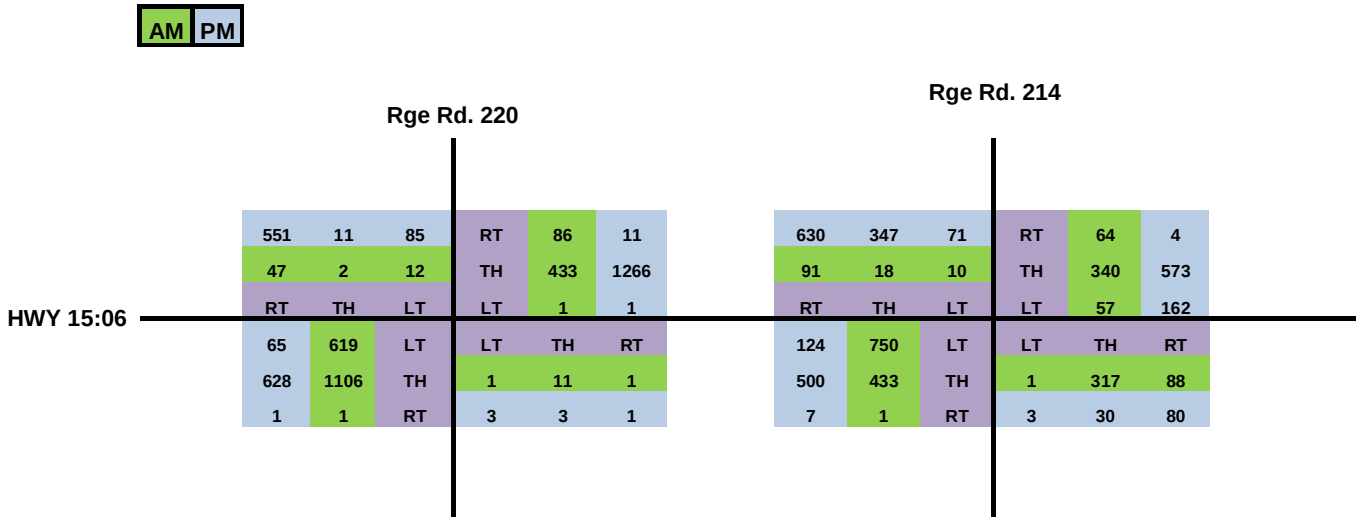

Figure 4.4f: Combined Traffic Forecast in 2038 Horizon AM and PM Peak

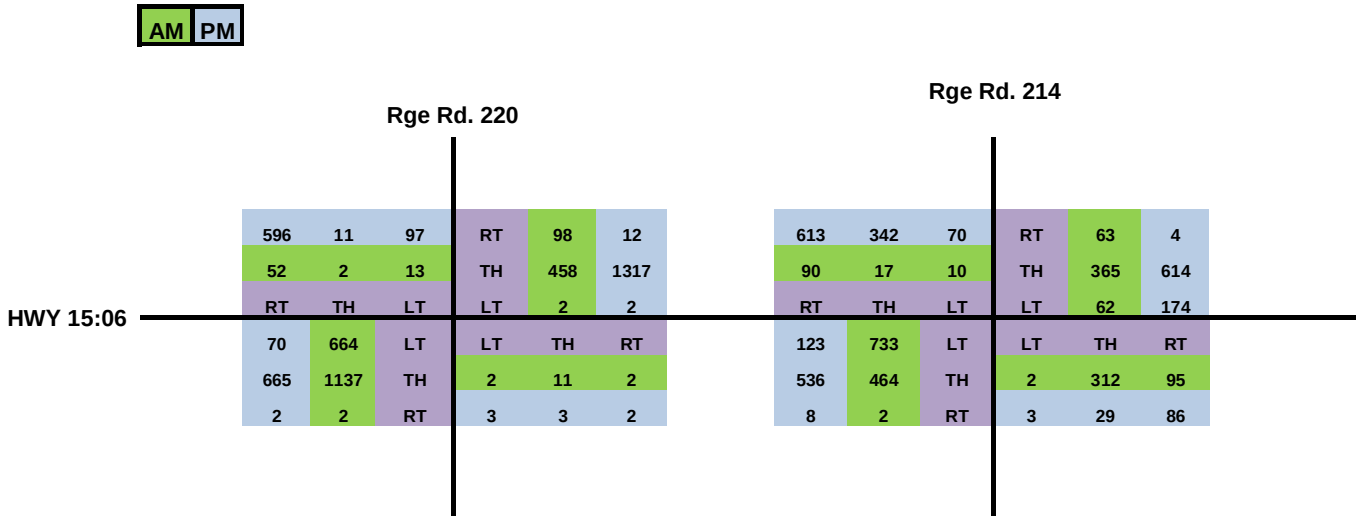

5 CAPACITY ANALYSIS

5.1 Intersection Capacity Analysis – Synchro 8

The existing intersections of Highway 15 with Range Road 220 and Range Road 214 are currently illuminated and signalized. Based on the location of the intersections geographically, analysis of pedestrian movements is not applicable.

Using the existing geometry at both intersections, several scenarios were evaluated using the Sychcro 8 modeling program. The Synchro program evaluates the intersection based on Level of Service (LOS), which is based on vehicle delay (in seconds) the average user of the intersection experiences.

At signalized control intersections, the LOS of the intersection is calculated using the time delay per vehicle (seconds) and volume to capacity ratio as shown below.

Table 6.1a: Signalized Intersection Level of Service Criteria (2010 HCM)

Control Delay Per Vehicle (seconds)	LOS by Volume to Capacity Ratio (v/c)	
v/c	≤ 1	> 1
≤ 10	A	F
> 10 ≤ 20	B	F
> 20 ≤ 35	C	F
> 35 ≤ 55	D	F
> 55 ≤ 80	E	F
> 80	F	F

5.2 Limitations

As per AT standards, a minimum LOS D is considered acceptable. In addition, Volume to Capacity (v/c) ratios were also reviewed with the objective of keeping them under 0.9. Similarly, delays and 95% queue lengths were looked at and were kept at reasonable limits.

Due to the existing dual left turn lanes for EB traffic being in excess of 900m, queuing was not considered an issue.

5.3 Synchro Model Inputs

Six scenarios were modelled in Synchro 8 using combined (Background plus Development) traffic volumes for 2013, 2018, 2023, 2028, 2033 and 2038 during AM & PM peaks. Refer to section 4.5 of this report and Appendix 'I' for details of the diagrams.

5.1 Synchro Model Outputs

Tables 5.1.1a to 5.1.1f summarize the results of the analysis for the six scenarios. Refer to Appendix 'I' for details of the analysis.

Scenario 1: Existing Year 2013 AM and PM Peak

Table 5.1.1a: Summary of 2013 Post Development Capacity Assessment

MODEL RESULTS (2013 Base Year)

SCENARIO	INT.	PARAMETER	EBL	EBT	EBR	WBL	WBT	WBR	NBL	NBT	NBR	SBL	SBT	SBR	INT - LOS
AM 2013	Hwy 15 & Rge Rd. 220	LOS	C	B	A	C	B	B	B	B	B	C	C	A	B
		V/C Ratio	0.58	0.60	0.01	0.02	0.33	0.01	0.07	0.07	0.07	0.05	0.05	0.00	
		Total Delay (s)	27.4	12.8	0.0	21.2	15.2	13.0	18.5	18.5	18.5	21.7	21.7	0.0	
	Hwy 15 & Rge Rd. 214	LOS	D	B	A	C	C	A	D	D	D	C	C	A	C
		V/C Ratio	0.85	0.24	0.01	0.21	0.43	0.15	0.85	0.85	0.85	0.07	0.07	0.04	
		Total Delay (s)	36.4	15.7	0.0	33.3	30.4	0.7	43.7	43.7	43.7	21.4	21.4	21.4	
PM 2013	Hwy 15 & Rge Rd. 220	LOS	C	A	A	C	B	B	B	B	B	C	C	A	B
		V/C Ratio	0.06	0.29	0.01	0.02	0.72	0.01	0.07	0.07	0.07	0.05	0.05	0.09	
		Total Delay (s)	21.5	8.3	0.0	21.2	18.5	11.4	18.3	18.3	18.3	21.7	21.7	0.1	
	Hwy 15 & Rge Rd. 214	LOS	C	C	A	C	C	A	A	A	A	D	D	A	C
		V/C Ratio	0.20	0.41	0.01	0.45	0.68	0.01	0.18	0.18	0.18	0.86	0.86	0.25	
		Total Delay (s)	23.6	22.9	0.0	30.1	30.8	0.0	8.6	8.6	8.6	41.0	41.0	0.2	

Based on the October 2013 turning movement counts, the intersections are operating at an acceptable level of service and no improvements are recommended.

Scenario 2: Post Development Year 2018 AM and PM Peak

Table 5.1.1b: Summary of 2018 Post Development Capacity Assessment

MODEL RESULTS (2018 Projected Combined)

SCENARIO	INT.	PARAMETER	EBL	EBT	EBR	WBL	WBT	WBR	NBL	NBT	NBR	SBL	SBT	SBR	INT - LOS
AM 2018	Hwy 15 & Rge Rd. 220	LOS	C	A	A	C	C	C	C	C	C	C	C	A	B
		V/C Ratio	0.80	0.56	0.01	0.03	0.52	0.40	0.11	0.11	0.11	0.13	0.13	0.03	
		Total Delay (s)	26.3	9.8	0.0	26.2	26.3	27.3	23.2	23.2	23.2	28.1	28.1	0.0	
	Hwy 15 & Rge Rd. 214	LOS	D	C	A	D	D	A	D	D	D	C	C	A	C
		V/C Ratio	0.81	0.29	0.01	0.29	0.63	0.20	0.78	0.78	0.78	0.07	0.07	0.04	
		Total Delay (s)	37.5	20.8	0.0	45.6	46.3	1.3	39.5	39.5	39.5	22.9	22.9	0.0	
PM 2018	Hwy 15 & Rge Rd. 220	LOS	C	A	A	C	C	B	C	C	C	D	D	A	B
		V/C Ratio	0.16	0.29	0.01	0.03	0.84	0.02	0.07	0.07	0.07	0.73	0.73	0.31	
		Total Delay (s)	28.1	8.1	0.0	31.2	28.2	14.8	22.3	22.3	22.3	52.4	52.4	0.3	
	Hwy 15 & Rge Rd. 214	LOS	C	C	A	C	D	A	A	A	A	C	C	A	C
		V/C Ratio	0.23	0.59	0.02	0.52	0.80	0.01	0.18	0.18	0.18	0.81	0.81	0.28	
		Total Delay (s)	26.3	29.5	0.0	34.2	39.2	0.0	7.5	7.5	7.5	34.0	34.0	0.3	

2018 includes Sasol's construction traffic volumes. The intersections are operating at an acceptable level of service and no improvements are recommended.

Scenario 3: Post Development Year 2023 AM and PM Peak

Table 5.1.1c: Summary of 2023 Post Development Capacity Assessment

MODEL RESULTS (2023 Projected Combined)

SCENARIO	INT.	PARAMETER	EBL	EBT	EBR	WBL	WBT	WBR	NBL	NBT	NBR	SBL	SBT	SBR	INT - LOS
AM 2023	Hwy 15 & Rge Rd. 220	LOS	C	A	A	C	C	D	C	C	C	C	C	A	C
		V/C Ratio	0.86	0.54	0.01	0.03	0.65	0.70	0.14	0.14	0.14	0.20	0.20	0.04	
		Total Delay (s)	27.5	8.7	0.0	31.2	34.6	44.6	28.5	28.5	28.5	34.9	34.9	0.0	
	Hwy 15 & Rge Rd. 214	LOS	D	B	A	D	D	A	D	D	D	C	C	A	D
		V/C Ratio	0.90	0.31	0.01	0.29	0.58	0.19	0.89	0.89	0.89	0.07	0.07	0.04	
		Total Delay (s)	42.5	19.1	0.0	40.1	38.5	1.0	49.3	49.3	49.3	22.6	22.6	0.0	
PM 2023	Hwy 15 & Rge Rd. 220	LOS	D	A	A	B	C	B	B	B	B	D	D	A	B
		V/C Ratio	0.38	0.32	0.01	0.02	0.83	0.03	0.05	0.05	0.05	0.74	0.74	0.42	
		Total Delay (s)	43.5	9.5	0.0	15.8	28.2	15.6	18.1	18.1	18.1	45.1	45.1	0.5	
	Hwy 15 & Rge Rd. 214	LOS	C	C	A	D	C	A	A	A	A	C	C	A	C
		V/C Ratio	0.40	0.66	0.02	0.71	0.63	0.01	0.18	0.18	0.18	0.79	0.79	0.30	
		Total Delay (s)	31.9	29.2	0.0	47.6	27.6	0.0	6.4	6.4	6.4	29.3	29.3	0.3	

2023 includes Sasol's operational staff and stage two construction workforce on site. Although the intersections are operating at an acceptable level of service, consideration to increasing the NB lane configuration from 1 to 2 lanes will improve the V/C ratio and alleviate the congestion.

Scenario 4: Post Development Year 2028 AM and PM Peak

Table 5.1.1d: Summary of 2028 Post Development Capacity Assessment

MODEL RESULTS (2028 Projected Combined)

SCENARIO	INT.	PARAMETER	EBL	EBT	EBR	WBL	WBT	WBR	NBL	NBT	NBR	SBL	SBT	SBR	INT - LOS
AM 2028	Hwy 15 & Rge Rd. 220	LOS	C	B	A	C	C	C	C	C	C	C	C	A	B
		V/C Ratio	0.78	0.60	0.01	0.03	0.55	0.33	0.11	0.11	0.11	0.12	0.12	0.03	
		Total Delay (s)	26.6	10.6	0.0	26.2	25.9	25.2	23.2	23.2	23.2	27.9	27.9	0.0	
	Hwy 15 & Rge Rd. 214	LOS	D	C	A	D	D	A	D	D	D	C	C	A	C
		V/C Ratio	0.83	0.33	0.01	0.34	0.66	0.19	0.82	0.82	0.82	0.07	0.07	0.04	
		Total Delay (s)	39.2	20.7	0.0	46.9	45.1	1.1	43.3	43.3	45.1	23.6	23.6	0.0	
PM 2028	Hwy 15 & Rge Rd. 220	LOS	C	A	A	D	B	A	C	C	C	D	D	A	B
		V/C Ratio	0.22	0.32	0.01	0.03	0.82	0.02	0.07	0.07	0.07	0.68	0.68	0.29	
		Total Delay (s)	33.1	8.3	0.0	45.0	19.7	6.9	22.4	22.4	22.4	48.2	48.2	0.3	
	Hwy 15 & Rge Rd. 214	LOS	C	C	A	D	D	A	A	A	A	D	D	A	C
		V/C Ratio	0.24	0.63	0.02	0.61	0.79	0.01	0.20	0.20	0.20	0.83	0.83	0.28	
		Total Delay (s)	28.6	27.1	0.0	39.7	37.5	0.0	7.7	7.7	7.7	37.9	37.9	0.3	

2028 include Sasol's operational staff. The intersections are operating at an acceptable level of service and no improvements are recommended.

Scenario 5: Post Development Year 2033 AM and PM Peak

Table 5.1.1e: Summary of 2033 Post Development Capacity Assessment

MODEL RESULTS (2033 Projected Combined)

SCENARIO	INT.	PARAMETER	EBL	EBT	EBR	WBL	WBT	WBR	NBL	NBT	NBR	SBL	SBT	SBR	INT - LOS
AM 2033	Hwy 15 & Rge Rd. 220	LOS	C	B	A	C	C	C	C	C	C	C	C	A	B
		V/C Ratio	0.80	0.61	0.01	0.03	0.61	0.38	0.11	0.11	0.11	0.13	0.13	0.03	
		Total Delay (s)	26.5	11.0	0.0	26.2	27.9	26.8	23.2	23.2	23.2	28.1	28.1	0.0	
	Hwy 15 & Rge Rd. 214	LOS	D	C	A	D	D	A	D	D	D	C	C	A	D
		V/C Ratio	0.87	0.36	0.01	0.37	0.71	0.20	0.85	0.85	0.85	0.07	0.07	0.04	
		Total Delay (s)	41.7	21.0	0.0	47.6	46.9	1.1	46.5	46.5	46.5	23.6	23.6	0.0	
PM 2033	Hwy 15 & Rge Rd. 220	LOS	D	A	A	D	C	B	C	C	C	D	D	A	B
		V/C Ratio	0.30	0.34	0.01	0.04	0.79	0.02	0.06	0.06	0.06	0.66	0.66	0.31	
		Total Delay (s)	44.2	9.9	0.0	41.4	24.2	13.9	23.5	23.5	23.5	50.1	50.1	0.3	
	Hwy 15 & Rge Rd. 214	LOS	C	C	A	D	D	A	A	A	A	C	C	A	C
		V/C Ratio	0.32	0.73	0.02	0.73	0.85	0.01	0.20	0.20	0.20	0.80	0.80	0.29	
		Total Delay (s)	30.8	32.6	0.0	48.5	39.1	0.0	6.7	6.7	6.7	32.7	32.7	0.3	

2033 includes Sasol's operational staff and turnaround staff. The intersections are operating at an acceptable level of service and no improvements are recommended.

Scenario 6: Post Development Year 2038 AM and PM Peak

Table 5.1.1f: Summary of 2038 Post Development Capacity Assessment

MODEL RESULTS (2038 Projected Combined)

SCENARIO	INT.	PARAMETER	EBL	EBT	EBR	WBL	WBT	WBR	NBL	NBT	NBR	SBL	SBT	SBR	INT - LOS
AM 2038	Hwy 15 & Rge Rd. 220	LOS	C	B	A	C	C	C	C	C	C	C	C	A	B
		V/C Ratio	0.79	0.61	0.01	0.03	0.52	0.25	0.11	0.11	0.11	0.12	0.12	0.02	
		Total Delay (s)	29.6	10.1	0.0	28.8	24.2	22.7	25.2	25.2	25.2	30.5	30.5	0.0	
	Hwy 15 & Rge Rd. 214	LOS	D	C	A	D	D	A	D	D	D	C	C	A	C
		V/C Ratio	0.85	0.40	0.01	0.36	0.78	0.19	0.87	0.87	0.87	0.07	0.07	0.04	
		Total Delay (s)	38.1	20.7	0.0	41.9	46.8	1.0	45.4	45.4	45.4	21.7	21.7	0.0	
PM 2038	Hwy 15 & Rge Rd. 220	LOS	D	A	A	B	C	B	C	C	C	D	D	A	B
		V/C Ratio	0.26	0.33	0.01	0.02	0.80	0.02	0.07	0.07	0.07	0.61	0.61	0.27	
		Total Delay (s)	43.9	6.4	0.0	12.8	22.9	12.4	25.1	25.1	25.1	50.1	50.1	0.3	
	Hwy 15 & Rge Rd. 214	LOS	C	C	A	D	D	A	A	A	A	D	D	A	C
		V/C Ratio	0.28	0.68	0.02	0.75	0.82	0.01	0.21	0.21	0.21	0.80	0.80	0.28	
		Total Delay (s)	29.1	31.6	0.1	53.3	39.8	0.0	7.4	7.4	7.4	36.9	36.9	0.3	

2038 includes Sasol's operational staff. The intersections are operating at an acceptable level of service and no improvements are recommended.

5.2 Discussion on the Results of Capacity Assessment

Generally, it is desirable to maintain a minimum Intersection Level of Service (LOS) of "D" or better. Based on the existing and projected peak hour traffic volumes at Highway 15 and Range Road 220 and Highway 15 Range Road 214 intersections, both intersections will operate at an overall LOS of "C" or better, except in the year 2023 and 2033 at Range Road 214 intersection which will operate at LOS of "D" during the AM peak.

The projected traffic volumes for AIH have been estimated based on stakeholder consultation regarding their anticipated construction, turnaround/maintenance, and normal daily traffic operation that will be generated over the next twenty five years. The projected traffic volumes vary from year to year, depending on what activities have been anticipated to happen in a given year. The year 2023 was identified to be a peak year for analysis based on Sasol's construction (phase 2) and operation activities occurring simultaneously. The traffic volumes appear to taper off in the later years as majority of the construction activities have been completed.

Instead of trying to determine the year the operation of the intersections may start to breakdown, OSW reviewed other scenarios to determine how much more traffic the intersection could accommodate before dropping to a LOS of 'D' or 'E'. Using the 2023 traffic projections as a base year, the traffic volumes going to AIH were inflated by a constant rate until the level of service dropped. It was determined that the 2023 AM Peak Hour traffic volumes would be able to accommodate an additional 50% going to the north without a change to the level of service. At 75%, it was determined that the Intersection of Range Road 220 (which is taking handling majority of the traffic from this TIA report) would fall to a level of service 'F'. Results of this sensitivity analysis are included in Appendix 'K'.

The Highway Capacity Manual Intersection LOS described above measures the performance of an intersection based on the average delay experienced by motorists. Another method of measuring the performance is the Intersection Capacity Utilization (ICU) method, which measures the amount of reserve capacity or capacity deficit at an intersection. The ICU does not predict delay, but it can be used to predict how often an intersection will experience congestion. The ICU values as related to the LOS are shown in the following Table.

ICU Level of Service

ICU	LOS
0 to 55%	A
>55% to 64%	B
>64% to 73%	C
>73% to 82%	D
>82% to 91%	E
>91% to 100%	F
>100% to 109%	G
>109%	H

A brief description of the conditions expected for each ICU level of service follows:

LOS A, ICU 0.55: The intersection has no congestion. A cycle length of 80 seconds or less will move traffic efficiently. All traffic should be served on the first cycle. Traffic fluctuations, accidents, and lane closures can be handled with minimal congestion. This intersection can accommodate up to 40% more traffic on all movements.

LOS B, 0.55 < ICU 0.64: The intersection has very little congestion. Almost all traffic will be served on the first cycle. A cycle length of 90 seconds or less will move traffic efficiently. Traffic fluctuations, accidents, and lane closures can be handled with minimal congestion. This intersection can accommodate up to 30% more traffic on all movements.

LOS C, 0.64 < ICU 0.73: The intersection has no major congestion. Most traffic should be served on the first cycle. A cycle length of 100 seconds or less will move traffic efficiently.

LOS D, 0.73 < ICU 0.82: The intersection normally has no congestion. The majority of traffic should be served on the first cycle. A cycle length of 110 seconds or less will move traffic efficiently. Traffic fluctuations, accidents, and lane closures can cause significant congestion. Sub optimal signal timings cause congestion. This intersection can accommodate up to 10% more traffic on all movements.

LOS E, 0.82 < ICU 0.91: The intersection is right on the verge of congested conditions. Many vehicles are not served on the first cycle. A cycle length of 120 seconds is required to move all traffic. Minor traffic fluctuations, accidents, and lane closures can cause significant congestion. Sub optimal signal timings can cause significant congestion. This intersection has less than 10% reserve capacity available.

LOS F, 0.91 < ICU 1.00: The intersection is over capacity and likely experiences congestion periods of 15 to 60 minutes per day. Residual queues at the end of green are common. A cycle length over 120 seconds is required to move all traffic. Minor traffic fluctuations, accidents, and lane closures can cause increased congestion. Sub optimal signal timings can cause increased congestion.

LOS G, 1.00 < ICU 1.09: The intersection is 10% to 20% over capacity and likely experiences congestion periods of 60 to 120 minutes per day. Long queues are common. A cycle length over 120 seconds is required to move all traffic. Motorists may be choosing alternate routes, if they exist, or making fewer trips during the peak hour. Signal timings can be used to "ration" capacity to the priority movements.

LOS H, 1.09 < ICU: The intersection is 20% over capacity and could experience congestion periods of over 120 minutes per day. Long queues are common. A cycle length over 120 seconds is required to move all traffic. Motorists may be choosing alternate routes, if they exist, or make fewer trips during the peak hour. Signal timings can be used to "ration" capacity to the priority movements.

Based on the projected 2023 traffic volumes for the Highway 15 and Range Road 220 intersection, the intersection capacity utilization will be 64.6% in the AM Peak Hour for an ICU Level of Service of ‘C’, and 63.3% in the PM Peak Hour for a ICU Level of Service of ‘B’. Based on the projected 2023 traffic volumes for the proposed Highway 15 Range Road 214 intersection, the intersection capacity utilization will be 72.6% in the AM Peak Hour for an ICU Level of Service of ‘C’, and 63.1% in the PM Peak Hour for a ICU Level of Service of ‘B’.

6 CONCLUSIONS

This TIA report has reviewed the potential traffic impacts of the proposed developments in the Strathcona's Industrial Heartland area to the north of Highway 15:06 between Range Road 220 and Range Road 214. As both intersections have been upgraded and are currently signalized, only the intersection capacity analysis was considered necessary for this traffic impact assessment. Both the intersections were found to be operating at acceptable levels of service in all the analyzed scenarios (2018-2038). Based on Sasol's anticipated operation and construction workforce occurring simultaneously in 2023, the AM peak traffic volumes were found to be the highest among all the scenarios. Intersection capacity analysis for this worst case scenario has resulted in acceptable levels of service at both intersections. Based on sensitivity analysis, it was determined that an increase of up to 50% additional traffic volumes going to the study area can be accommodated with an acceptable level of service of D or better. An increase of 75% in the site generated traffic would lead to a level of service 'F' for the intersection of Highway 15 and Range Road 220.

With the increased urbanization of Fort Saskatchewan and increased activities in Strathcona's Industrial Heartland area, OSW believe that traffic volumes on Highway 830 will increase as the roadway network and infrastructure to the south is improved to serve as a secondary access to the area. The intent of improvements to the south of Highway 830 is to help in distributing the traffic from Highway 15 going through Fort Saskatchewan.

With the potential roadway network/infrastructure improvements to the south of Highway 15, the south leg of Highway 15/Range Road 214 intersection is recommended to be monitored with respect to capacity issues. Improvement of the existing two lane roadway to a four lane roadway may require consideration to help with capacity at the intersection approach at such time. It should be noted, this potential "improvement consideration" is beyond the effects of Sasol's Canada GTL Project and it will need to be addressed as part of the on-going industrial expansion with the governing bodies within the area.

7 RECOMMENDATIONS

Based on the above analysis and discussions with surrounding companies and Strathcona County officials, OSW submits the following recommendations to mitigate the traffic impacts of the Project:

- No Improvements to the Highway 15/Range Road 220 intersection prior to the commencement of the Project's construction in 2018.
- No Improvement to the Highway 15/Range Road 214 intersection prior to the commencement of the Project's construction in 2018.
- Range Road 220 is recommended to be twinned up to 200m north of Sasol's main entrance to accommodate the site generated traffic volumes destined to and from the Project site. The existing Range Road 220 is currently twinned 400m north of Highway 15, and an additional 1.4km of twinning will be required to accomplish this recommendation.
- Upgrading of Township 554 between Range Road 220 and west of Range Road 214, to 11m road width is recommended to accommodate expected Project-related vehicles through the north access. The anticipated length of upgrading is estimated to be 2.9km.

- The Project's access point located in the far NE corner should be upgraded to a Type 4A treatment to accommodate the construction traffic at this location.
- All other accesses to the Project site are recommended for Type 2A treatment to ensure vehicles going in and out of the site do not impede with the through traffic.
- All local roadway and access improvements are recommended to be implemented prior to the Project's first phase of construction.

8 HIGH LEVEL COST ESTIMATE

The cost estimated for the above note improvements are summarized in Table below. The unit prices are based on similar projects completed in recent past in Strathcona Industrial Heartland area.

High Level Cost Estimates for Recommended Improvements

Type of Work	Estimated Quantity	Unit Price	Estimated Cost
Rge. Rd. 220 twinning	1.4km	$1.6M/km	$2,240,000
Twp. Rd. 554 roadway upgrading	2.9km	$1.6M/km	$4,640,000
Sasol access improvements	4	$0.3M/treatment	$1,200,000
Contract			$8080,000
Contingencies (20%)			$1,616,000
Contract and Contingencies			$9,696,000
Land/Utilities/Pipelines			$1,200,000
Engineering (10%)			$969,600
		Total	$11,865,600
		Total (rounded)	$11,900,000

Opus Stewart Weir Ltd
Suite 300, 926 - 5th Avenue SW
Calgary AB T2P 0N7
Canada

t: +1 403 264 2585
f: +1403 264 2501
w: www.opussw.com

APPENDIX A

Key Plan & Site Location / Local Roadway Network

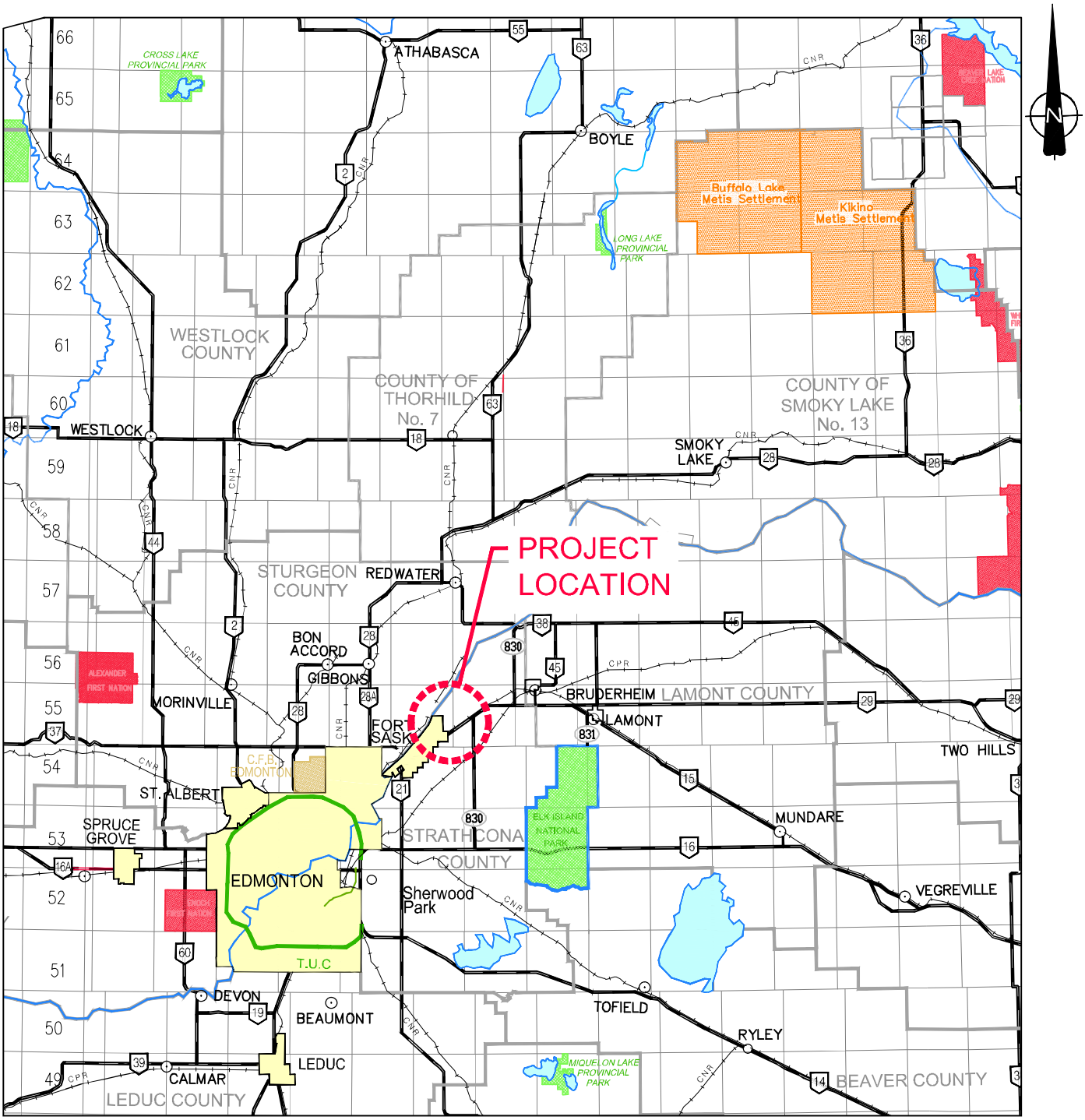

KEY PLAN

FOR

SASOL GTL FACILITY

LOCATED NORTHEAST OF

FORT SASKATCHEWAN, ALBERTA

OPUS STEWART WEIR

DRAWN:	RV	SCALE:	N.T.S.
CHECKED:	BS	DATE:	January 23, 2014
FILE No.:	ED55.36909	DWG No.:	FIGURE 1

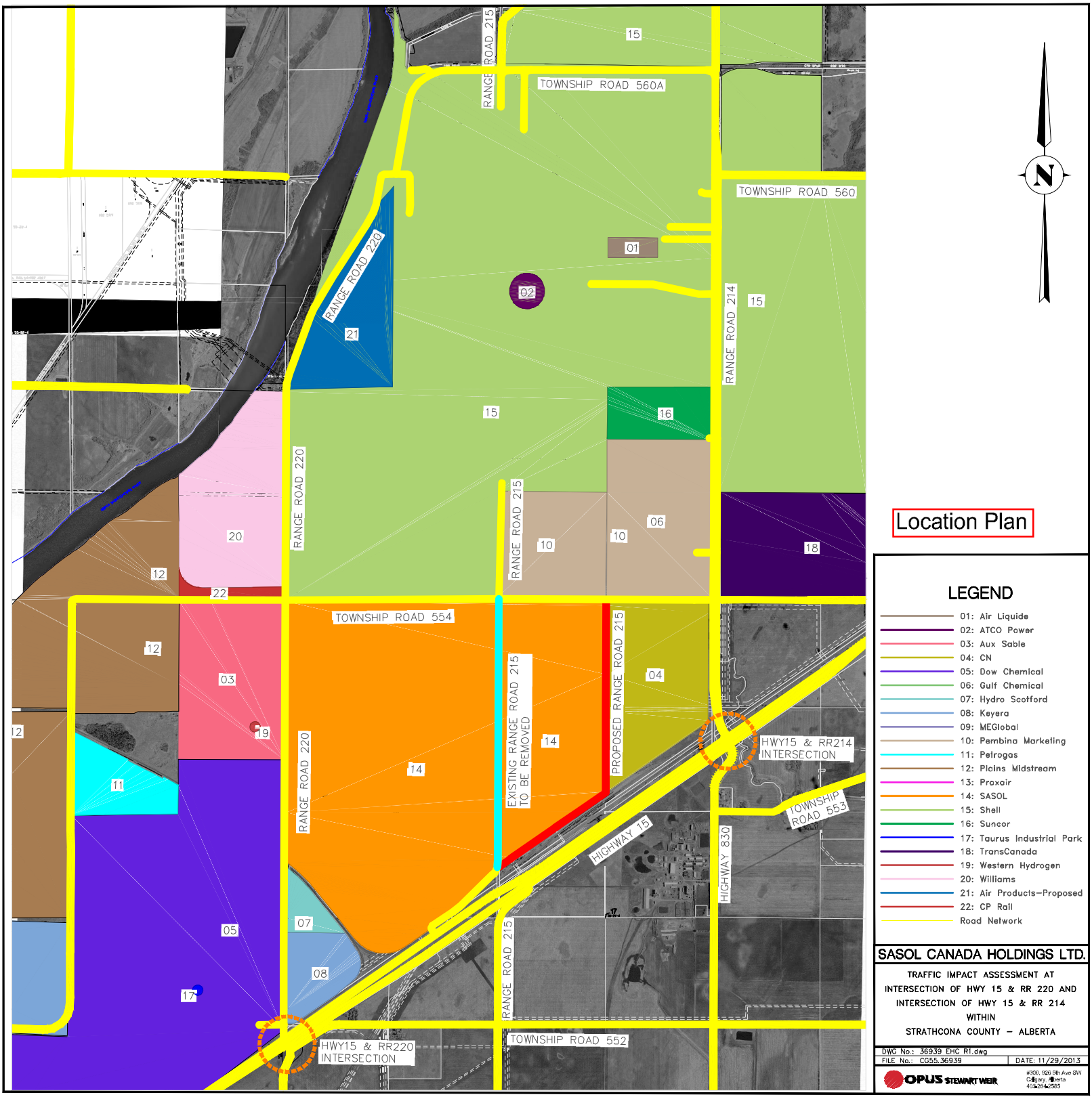

N

Location Plan

LEGEND

- 01: Air Liquide
- 02: ATCO Power
- 03: Aux Sable
- 04: CN
- 05: Dow Chemical
- 06: Gulf Chemical
- 07: Hydro Scotford
- 08: Keyera
- 09: MEGlobal
- 10: Pembina Marketing
- 11: Petrogas
- 12: Plains Midstream
- 13: Proxair
- 14: SASOL
- 15: Shell
- 16: Suncor
- 17: Taurus Industrial Park
- 18: TransCanada
- 19: Western Hydrogen
- 20: Williams
- 21: Air Products–Proposed
- 22: CP Rail
- Road Network

SASOL CANADA HOLDINGS LTD.

TRAFFIC IMPACT ASSESSMENT AT INTERSECTION OF HWY 15 & RR 220 AND INTERSECTION OF HWY 15 & RR 214 WITHIN STRATHCONA COUNTY – ALBERTA

DWG No.: 369.39 EHC R1.dwg
FILE No.: CG55.369.39 | DATE: 11/29/2013

OPUS STEWART WEIR
#300, 926 5th Ave SW
Calgary, Alberta
403.284.2585

APPENDIX B

Site Photos

Photo 1: Hwy 15:06 & RR 220 intersection – Looking east at the intersection.

Photo 2: Hwy 15:06 & RR 220 intersection – Looking west towards the intersection.

Photo 3: Hwy 15:06 & RR 220 intersection – At north leg looking through the intersection.

Photo 4: Hwy 15:06 & RR 220 intersection – At south leg looking north through the intersection.

Photo 5: Hwy 15:06 & RR 220 intersection – At eastbound left turn lanes and looking east.

Photo 6: Hwy 15:06 & RR 220 intersection – Looking south at the median crossover.

Photo 7: Hwy 15:06 & RR 214 intersection – Looking east at the intersection.

Photo 8: Hwy 15:06 & RR 214 intersection – Looking west at the intersection.

Photo 9: Hwy 15:06 & RR 214 intersection – At middle of intersection looking at north leg.

Photo 10: Hwy 15:06 & RR 214 intersection – At north leg looking through the intersection to the south.

Photo 11: Hwy 15:06 & RR 214 intersection – Hwy 15 looking east at the intersection.

Photo 12: Hwy 15:06 & RR 214 intersection – At the median looking east.

APPENDIX C

Meeting Minutes with Alberta Transportation (TOR)

Summary of Meeting

Project: SASOL Traffic Impact Assessment (TIA)
Date / Time: January 25, 2013 Time 10:00am
Location: Twin Atria – Crowsnest Room 208
In Attendance: **Jim Der, Gerard Marrinier, Cathy Maniego, Blair Knott, Stan Turner, Peter Ngo, Greg Plewis, Dave Hine, Basir Saleh**
Absent:
Purpose:
Written By: Basir Saleh

[This Summary of Meeting has been made from memory and from reference notes taken during the meeting. If there are any errors or omissions noted in your review, please contact the originator so that appropriate corrections may be made.]

	DESCRIPTION	ACTION BY
	1.0 Objective: The meeting was initiated by Stewart Weir (SWCL) to gain insight and direction from Alberta Transportation (AT) with regards to SASOL's development in the NE quadrant of Highway 15 and RR 220.	
	2.0 Background and Discussion: Greg Plewis provided an introduction and background about RR220. In 2009, SWCL was commissioned by Strathcona County to complete a TIA for the surrounding development, in particular the TOTAL E & P Canada site. Based on the generated future traffic, SWCL recommended upgrading the Highway 15 and RR220 intersection to accommodate expected traffic. In 2012, upgrade construction on the intersection was completed. Due to the economic environment over the past couple of years, the anticipated pace of development within the area has not materialized as expected. Presently, SASOL has acquired an option to purchase the Total E&P Canada land situated north of CN's railway, north of Highway 15 and east of RR220, and is investigating the potential of development. In order to do so, SWCL has been engaged to determine Alberta Transportation's expectations and requirements for a TIA at this location.	

3.0 Concerns, Input, and Conclusion:

Because the SASOL development is different than the Total E&P development described in the 2010 TIA, Alberta Transportation requires a new TIA to be completed to specifically reflect the SASOL development. AT indicated they were agreeable to a simplified TIA where the TOTAL E&P traffic volumes are replaced with SASOL's construction and operation traffic volumes, and the traffic volumes from other developments are simply re-projected based on SASOL's proposed development schedule.

The intersection(s) that will be impacted by the proposed development will require review and analysis to ensure the infrastructure can safely handle the projected growth:

- Highway 15 and RR 220 is expected as the main intersection that will be utilized by the proposed development. Therefore, the TIA will be concentrated on this intersection.

- Highway 15 and RR214 is expected to see construction traffic in the interim. The utilization of this intersection in the interim and longer term will need to be confirmed with SASOL. If this intersection is anticipated for utilization, then it will require full review and analysis in the TIA. — SWCL / SASOL

- Alberta Transportation will review the 2010 TIA as a base line of understanding and will provide SWCL with any comments and concerns they may have with regards to approach to be incorporate in the new TIA. The new TIA will follow the same approach and assumptions and will account for SASOL's projected volumes. — AT

- The TIA's base year (year 0 of analysis)) must correspond to SASOL's proposed construction schedule and timelines for development (including year 5, 10, 15, and 20 year).

- No traffic generated by the proposed SASOL development is anticipated to use Range Road 215 and therefore, RR215 will not be included in the capacity analysis. Discussion with CN will be beneficial to gain better insight on their existing and future operation.

- The proposed rerouting of the portion of RR215 that goes through the middle of SASOL's property will require consultation with the road agency (AT and County) and major stakeholders (CN). This is recommended to be completed separate from the TIA.

	o Sasol's internal site roadway network will need to be reviewed and assessed as it relates to surrounding network and distribution of traffic. High level recommendation is to be provided. o Dialogue and discussion with the major stakeholders in the area will also need to be undertaken as part of the TIA to re-affirm the anticipated development from the 2010 TIA. o At the present time, another consultant is reviewing the long term access management strategy within the area. Alberta Transportation anticipates that at the ultimate stage, direct access to RR220 from Highway 15 will be closed off and the traffic diverted to the future interchange site at RR214. For the purposes of this TIA, RR220 and RR214 (if impacted) will be analyzed as at-grade intersections.	
	4.0 Adjournment: The meeting was adjourned at: 11:00am	

APPENDIX D

Geometric Information – Highway & Intersection Configuration

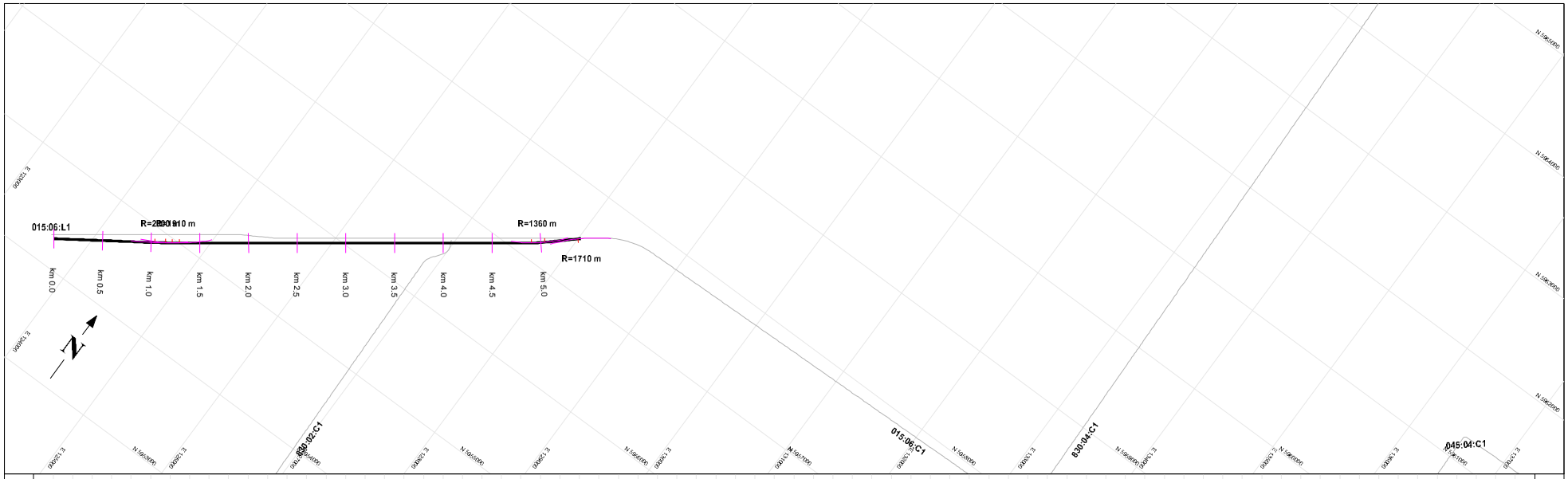

Alberta Infrastructure and Transportation

015:06:R1

km 0.0–5.4

Surveyed: 2004/10/31

Page 1 of 1

Horizontal Scale: 1:40000
Vertical Scale: 1:2000
Aspect Ratio: 20:1

Ellipsoid: NAD83
Geoid: CGeoid95
Mapping: 10TM (Central meridian 115°W)

Accuracy: ±1m Horizontal, ±2m Vertical in areas of acceptable GPS constellation

Horizontal curvature has been assumed to be "circular and tangent" rather than "circular, spiral and tangent"

EBA Engineering Consultants Ltd. eba

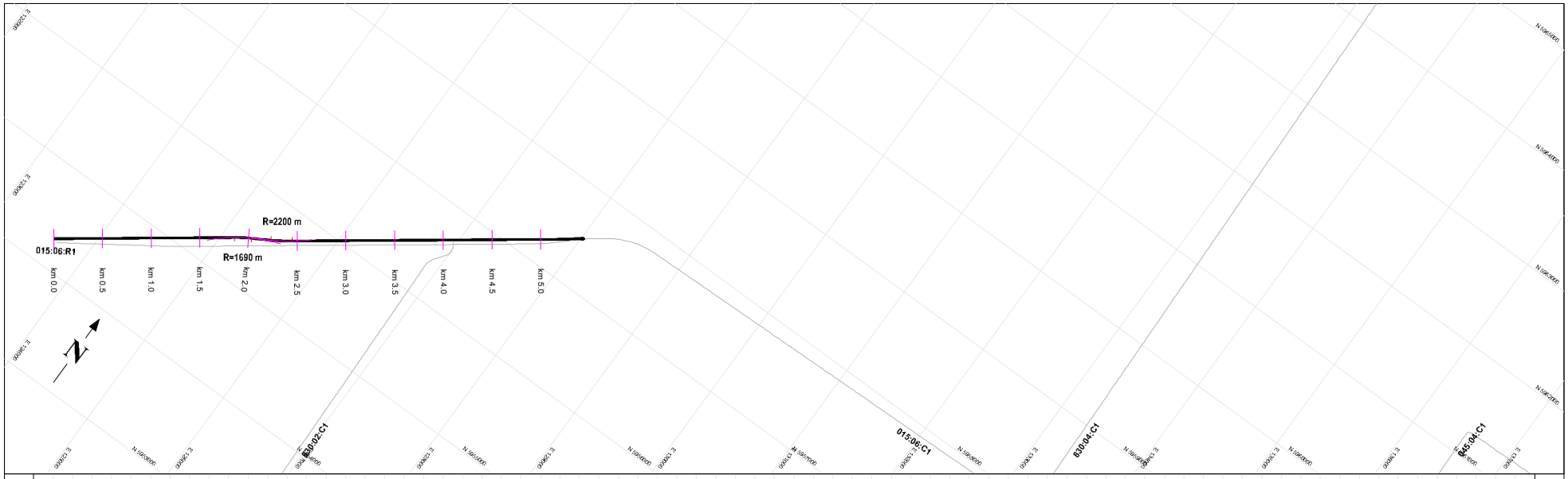

Alberta INFRASTRUCTURE AND TRANSPORTATION

015:06:L1

km 0.0–5.4

Surveyed: 2004/10/31

Page 1 of 1

Horizontal Scale: 1:40000
Vertical Scale: 1:2000
Aspect Ratio: 20:1

Ellipsoid: NAD83
Geoid: CGeoid95
Mapping: 10TM (Central meridian 115°W)

Accuracy: ±1m Horizontal, ±2m Vertical in areas of acceptable GPS constellation

Horizontal curvature has been assumed to be "circular and tangent" rather than "circular, spiral and tangent"

EBA Engineering Consultants Ltd. eba

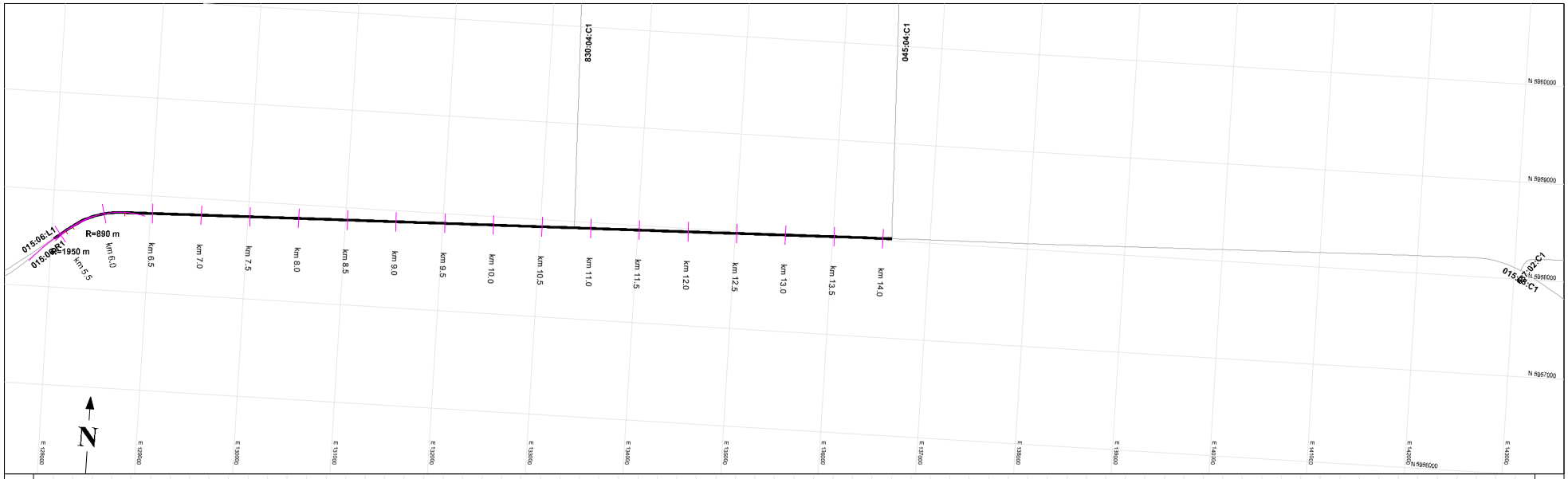

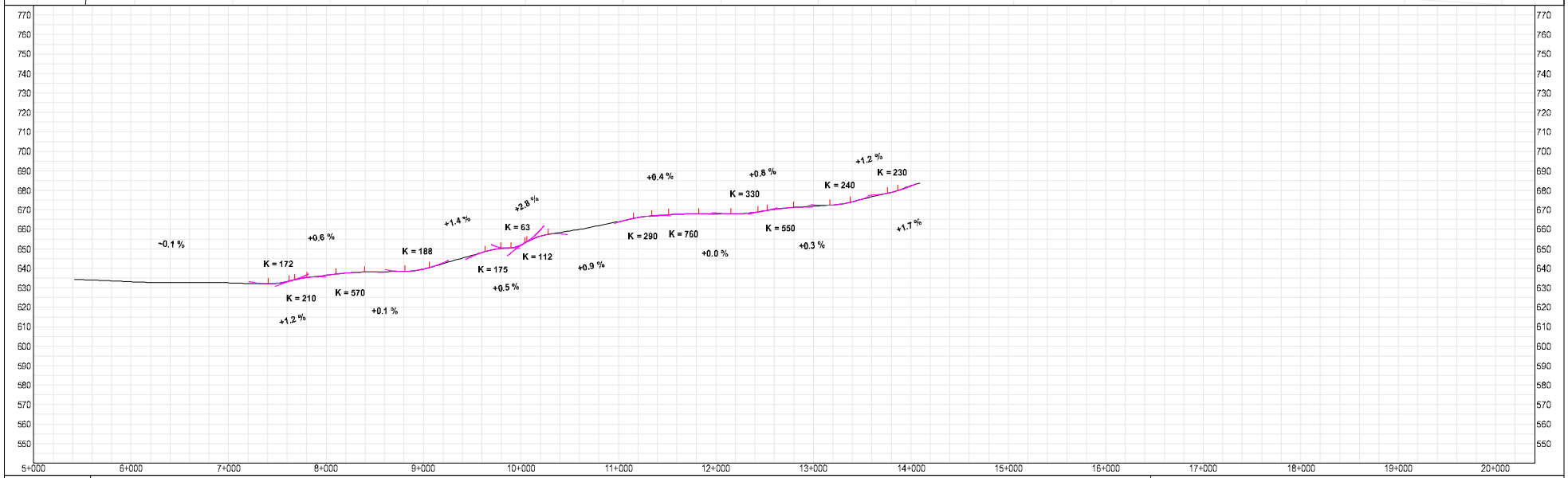

Alberta INFRASTRUCTURE AND TRANSPORTATION

015:06:C1

km 5.4–14.1

Surveyed: 2004/10/14

Page 1 of 1

Horizontal Scale: 1:40000
Vertical Scale: 1:2000
Aspect Ratio: 20:1

Ellipsoid: NAD83
Geoid: CGeoid95
Mapping: 10TM (Central meridian 115°W)

Accuracy: ±1m Horizontal, ±2m Vertical in areas of acceptable GPS constellation

Horizontal curvature has been assumed to be "circular and tangent" rather than "circular, spiral and tangent"

EBA Engineering Consultants Ltd. eba

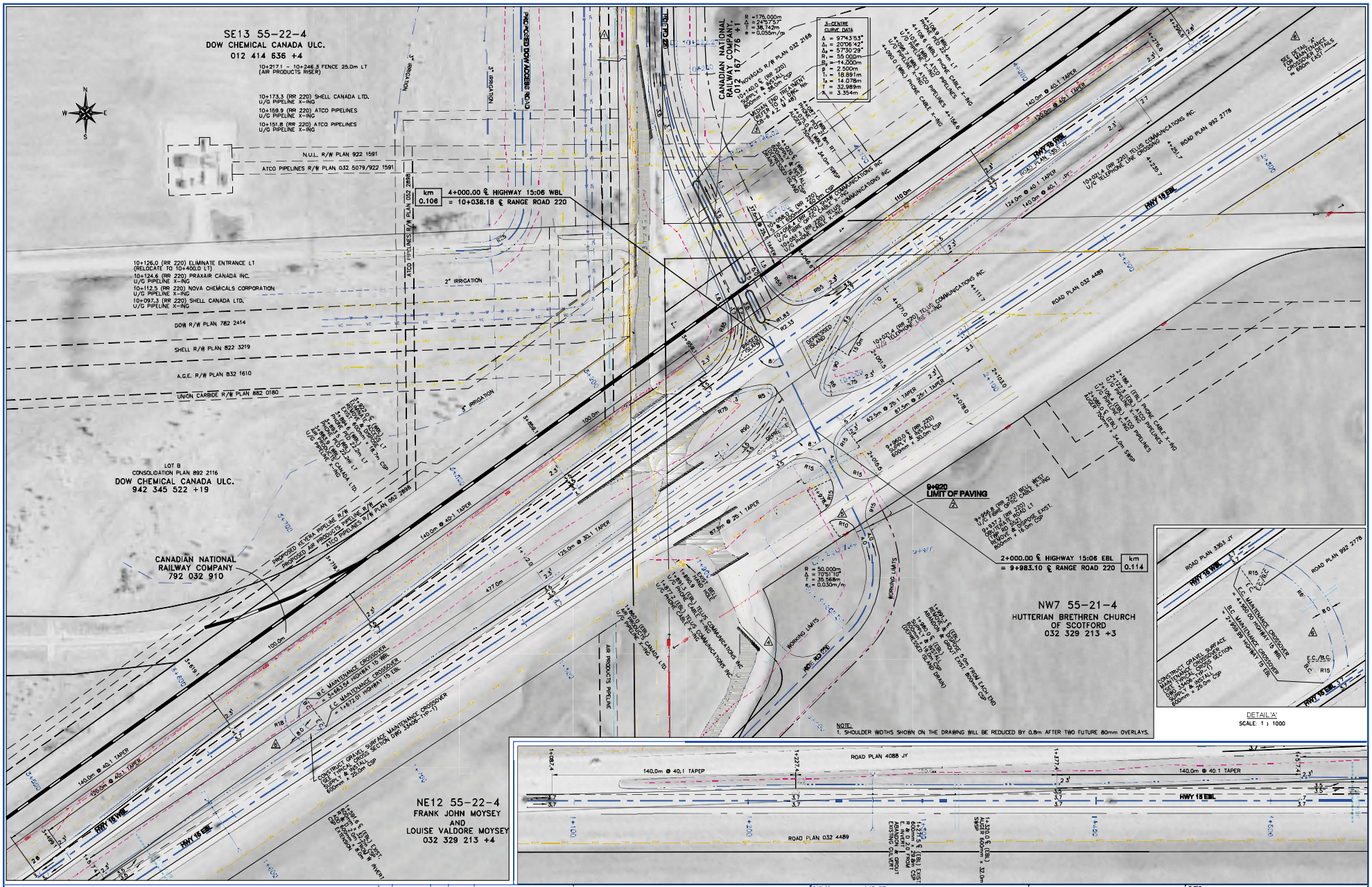

ISSUED FOR CONSTRUCTION
APRIL 15, 2011

#	DATE	BY	ENG	SUBJECT
-	-	-	-	-

REVISIONS

Original drawings signed and stamped by:

Designer: L. A. Crowe, P.Eng.Registration number: M24508 on April 13, 2011

Checker: G. Plewis, P.Eng.Registration number: M68127 on April 13, 2011

DATUM:	NAD 83
PROJECTION:	3TM
SCALE FACTOR:	-
COORDINATES:	GRID
Air Photo	mhmkh_20091105114327_TWP055RGE21#4_1_1.jpg
CONTOUR INTERVAL:	N/A
SCALE (m):	Horiz: 1:1000 Vert: N/A
DATE:	APR. 12, 2011
PROJECT LOCATION:	RANGE ROAD 220
SURVEY BY:	MC
DRAWN BY:	JAD
DESIGN BY:	GD
CHECKED BY:	DJH
APPROVED BY:	-
PROJECT MANAGER:	DJH
DRAWING/PROJECT No.:	33406-INT-1
REV. No.:	0
SHEET No.:	1 of 1

RANGE ROAD 220
(S. Hwy. 15 - S. Twp Rd. 560A)

INTERSECTIONAL TREATMENT AT HWY. 15 & RGE. RD. 220

ALBERTA TRANSPORTATION PLAN No.: IN-2221A-01-P

CLIENT: Strathcona County

CONSULTANT: Stewart Welr

PERMIT TO PRACTICE PERMIT NUMBER: P 292

The Association of Professional Engineers, Geologists and Geophysicists of Alberta

C:\Users\Jdorrington\Desktop\ISSUED FOR CONSTRUCTION - APR 2011\33406-INT PLANS-PHASE A-B-RD-REC4.dwg Plotted:April-13-11 4:15:44 PM By:----

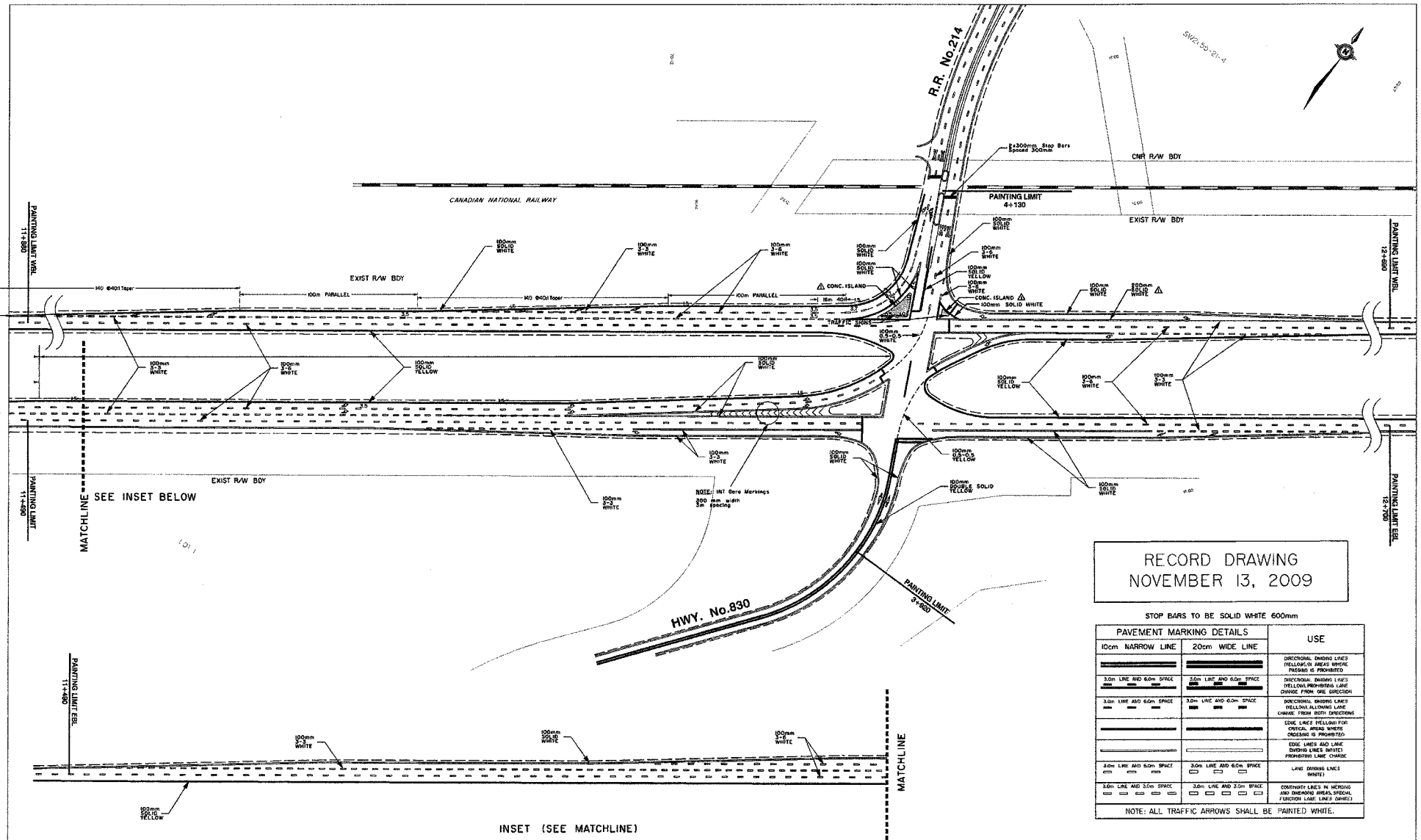

RECORD DRAWING
NOVEMBER 13, 2009

STOP BARS TO BE SOLID WHITE 600mm

PAVEMENT MARKING DETAILS		USE
10cm NARROW LINE	20cm WIDE LINE	
		DIRECTIONAL DIVIDING LINES (YELLOW) IN AREAS WHERE PASSING IS PROHIBITED
3.0m LINE AND 6.0m SPACE	3.0m LINE AND 6.0m SPACE	DIRECTIONAL DIVIDING LINES (YELLOW) PROHIBITING LANE CHANGE FROM ONE DIRECTION
3.0m LINE AND 6.0m SPACE	3.0m LINE AND 6.0m SPACE	DIRECTIONAL DIVIDING LINES (YELLOW) ALLOWING LANE CHANGE FROM BOTH DIRECTIONS
		EDGE LINES (YELLOW) FOR CRITICAL AREAS WHERE CROSSING IS PROHIBITED
		EDGE LINES AND LANE DIVIDING LINES (WHITE) PROHIBITING LANE CHANGE
3.0m LINE AND 6.0m SPACE	3.0m LINE AND 6.0m SPACE	LANE DIVIDING LINES (WHITE)
3.0m LINE AND 3.0m SPACE	3.0m LINE AND 3.0m SPACE	CONTINUITY LINES IN MERGING AND DIVERGING AREAS, SPECIAL FUNCTION LANE LINES (WHITE)

NOTE: ALL TRAFFIC ARROWS SHALL BE PAINTED WHITE.

No.	REVISION	BY	DATE
1	ISSUED FOR TENDER	SP	07/07/10
2	ISSUED FOR CONSTRUCTION	SP	07/08/27
3	N.W. and N.E. QUADRANT CONC. ISLANDS	BH	08/05/20
4	RECORD DRAWING	KS	09/11/12

	BY	DATE
SURVEYED		
DESIGNED		
CHECKED		
DRAWN		

PLAN DESCRIPTION

BAR CODE F967196

COORDINATE DATA	PLAN No.
NAD 83	CONTRACT No.
BASE LONGITUDE	PLAN LOCATION

PHOTO No.	
TITLE SEARCH DATE	
GRAPHICS FILE	

	BY	DATE
TO IDMS		
TO GIS		
MICROFILMED		

CONSULTANT

JOB No. | PLAN No. HWY15-RR214-02

AECOM

PERMIT TO PRACTICE

PERMIT TO PRACTICE
EARTH TECH (CANADA) INC.
Signature A.D. Neill
Date NOV. 18, 2009
PERMIT NUMBER: P07502
The Association of Professional Engineers, Geologists and Geophysicists of Alberta

DESIGNER

PROFESSIONAL ENGINEER ALBERTA
SUREN PRIMAK
P.ENG DATE NOV 18, 09

CHECKER

PROFESSIONAL ENGINEER ALBERTA
P.D. HENDERSON
P.ENG DATE NOV 18 09

PLAN SHOWING INTERSECTION TREATMENT
PROPOSED PAVEMENT MARKING
JCT HWY 15:06 & RGE RD 214
EAST OF FT. SASKATCHEWAN

REGION	PLAN No.	PROJECT	CONTRACT No.	SHEET
NORTH CENTRAL	IN-2219A-2-P	HWY 15:06	25183-116-HC3 -C501-00163	2 of 4

Alberta INFRASTRUCTURE AND TRANSPORTATION

L:\work\101000\101913\02a-CAD\TRA\Drawings Current\FILE FENCE\IN-2219A-2-P.dgn

APPENDIX E

Stakeholder Questionnaire Survey

Traffic Impact Assessment for Intersection of Highway 15 with Rge.Rd.220 & Rge.Rd214 - Stakeholder Questionnaire (CG5536939)

1. Is the location of your existing site shown in the attached plan accurate?

2. Which roadway currently provides access to your site? (e.g. Twp. Rd. 554, Rge. Rd. 220, Rge. Rd. 214) and please identify current/future accesses on the attached map.

3. For travel to site, which Highways (Hwy 15 through Ft. Saskatchewan, Hwy 830 from the south, etc) are predominantly being utilized or identified for utilization? (breakdown by percentage e.g. *(70% Hwy 15, 30% Hwy 830))*

4. What is the current status of your development on site (2013)?

    a. *Existing # of employees and daily or peak hour vehicle movements?*

    b. *What percent of existing employees utilize Hwy 15 and RR 220 intersection?*

    c. *What percent of existing employees utilize Hwy 15 and RR 214 Intersection?*

    d. *What percentage of employees are expected to utilize Hwy 15 or Hwy 830 for travel to site?*

    e. *Other Intersection (on Hwy 15)?*

5. What is the future development and expansion plans for your site over the next 25 years (broken down by 2013, 2018, 2023, 2028, 2033, 2038)? Please identify the following for each year/phase of development:

    a. *What is the maximum number of staff anticipated for the construction period?*

    b. *What is the expected maximum daily vehicle movements (vehicles per day) during the construction period?* (refer to attached spreadsheet)

    c. *What is the maximum number of staff anticipated for operation?*

    d. *What is the expected maximum daily vehicle movements (vehicles per day) during operation?* (refer to attached spreadsheet)

    e. What is the anticipated turnaround for the facilities (Maintenance)? *(Frequency(identify year), Duration, maximum number of staff, and daily vehicle movements during the turnaround)*

    f. What percentage of staff are expected to be transported through bus services during construction, operation, and turnover?

6. What percent of staff are anticipated to utilize the following intersections to and from site during the construction, operation, and turnaround phases?

    a. *Highway 15 & RR 220 Intersections?*

    b. *Highway 15 & RR 214 Intersections?*

    c. *Other Intersection (on Hwy 15)?*

Traffic Impact Assessment: Highway 15 Intersection with RR220 & RR214

Table 1: Anticipated Traffic Distribution (percentage)

Horizon Year (Revise yr. as it pertains to your development)	Hwy 15 & RR220 Intersection (%)	Hwy 15 & RR214 Intersection (%)
2013		
2018		
2023		
2028		
2033		
2038		

Table 2: Existing/Anticipated Traffic Generators for Horizon Years:

Horizon Year (Revise yr. as it pertains to your development)	Type of Traffic Generation		
	Construction Period * (vehicles per day)	Operation Phase** (vehicles per day)	Turnover (Maintenance Periods) *** (vehicles per day)
2013			
2018			
2023			
2028			
2033			
2038			

Note: * The generated vehicle traffic during construction period (vehicles per day)

** The anticipated daily traffic on site once the development has been constructed.

*** The traffic generated from periodic (e.g. every 3-5 years) maintenance requirement for facility.

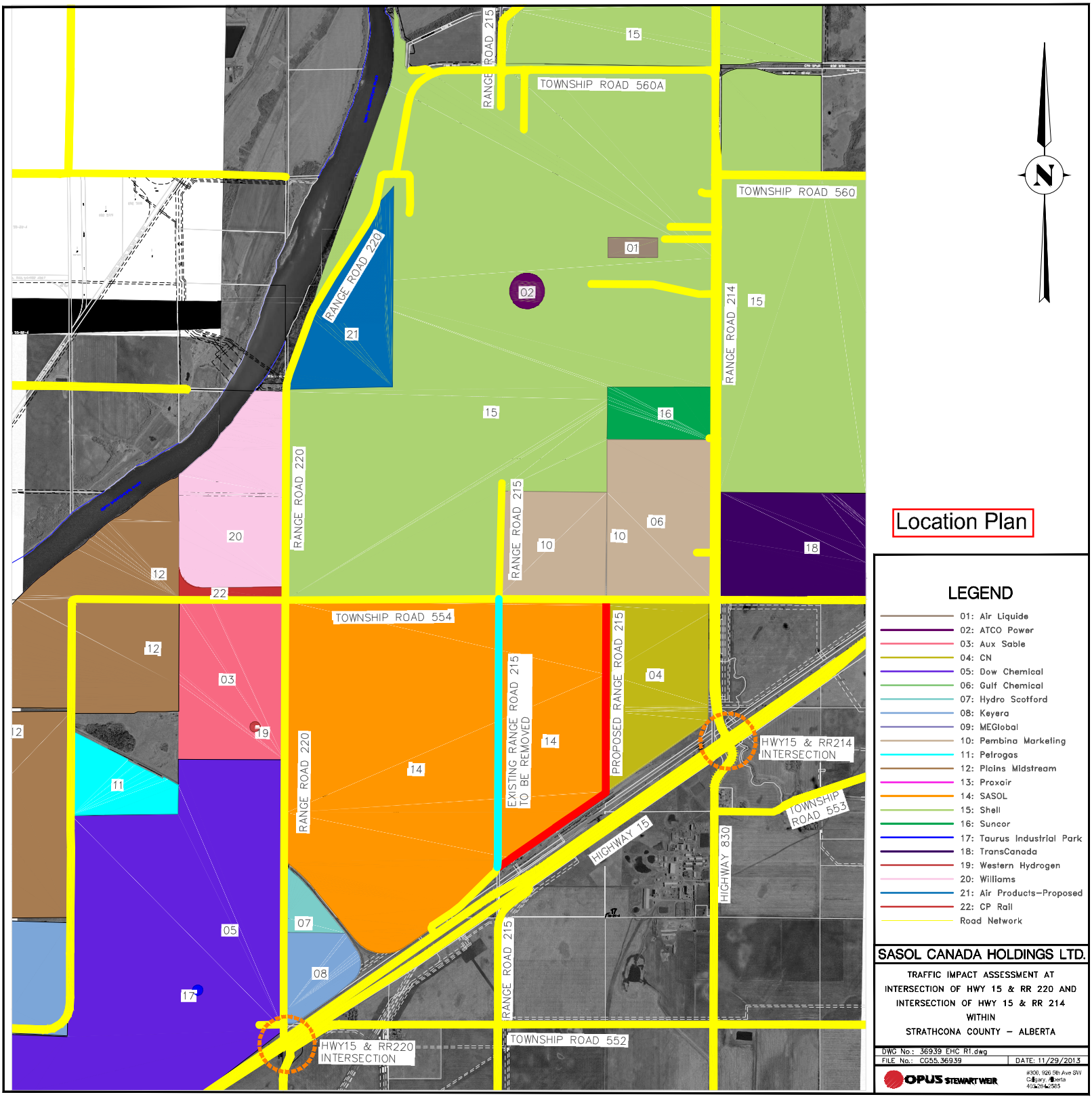

N

Location Plan

LEGEND

- 01: Air Liquide
- 02: ATCO Power
- 03: Aux Sable
- 04: CN
- 05: Dow Chemical
- 06: Gulf Chemical
- 07: Hydro Scotford
- 08: Keyera
- 09: MEGlobal
- 10: Pembina Marketing
- 11: Petrogas
- 12: Plains Midstream
- 13: Proxair
- 14: SASOL
- 15: Shell
- 16: Suncor
- 17: Taurus Industrial Park
- 18: TransCanada
- 19: Western Hydrogen
- 20: Williams
- 21: Air Products–Proposed
- 22: CP Rail
- Road Network

SASOL CANADA HOLDINGS LTD.

TRAFFIC IMPACT ASSESSMENT AT INTERSECTION OF HWY 15 & RR 220 AND INTERSECTION OF HWY 15 & RR 214 WITHIN STRATHCONA COUNTY – ALBERTA

DWG No.: 369.39 EHC R1.dwg
FILE No.: CG55.369.39 | DATE: 11/29/2013

OPUS STEWART WEIR
#300, 926 5th Ave SW
Calgary, Alberta
403.284.2585

APPENDIX F

Alberta Transportation Traffic Information

ALBERTA HIGHWAYS 1 TO 986
TRAFFIC VOLUME HISTORY 2003 - 2012

Alberta Transportation
Planning Branch
Strategic and Network Planning

Produced: 18-Feb-2013 By CornerStone Solutions Inc.

Hwy	CS	TCS	Muni	Location Description	2003 AADT	2004 AADT	2005 AADT	2006 AADT	2007 AADT	2008 AADT	2009 AADT	2010 AADT	2011 AADT	2012 AADT
14	16	28	Wain	E OF 17 SASK BORDER EJ	1140	1150	1150	1180	1180	1110	1030	1050	1080	1120
14	16	28	Prov	ALTA - SASK BORDER	1160	1140	1150	1190	1170	1110	1020	1060	1080	1110
15	04	08	Stur	S OF 37 W OF FT SASK	8130	8010	8490	8920	9360	8160	8350	8790	8210	11260
15	04	12	Stur	N OF 37 W OF FT SASK	12800	12670	12970	14300	15000	15720	16170	17010	16310	18450
15	04	12	Stur	W OF LAMOUREAUX DR 32-54-22-412700750	13000	12880	13180	14300	15000	15720	16170	17010	16310	18450
15	04	12	Stur	E OF LAMOUREAUX DR 32-54-22-412700750	13350	13210	13510	14660	15380	16110	16620	17470	16750	18960
15	04	12	Stur	2.0 KM W 15 & 21 FORT SASKATCHEWAN	13050	13200	13510	14640	15440	16140	16630	17560	16810	19000
15	05	99	CoFS	W OF RGE RD 220 12-55-22-400000220	8070	8040	8400	8860	11700		11910	12080	12260	12510
15	06	08	Strc	E OF RGE RD 220 12-55-22-400000220	7990	7920	8280	8740	11520		11560	11730	11910	12150
15	06	08	Strc	W OF RGE RD 215A WJ 18-55-21-406000880	7970	7900	8260	8720	11500	11050	11560	11730	11910	12150
15	06	08	Strc	E OF RGE RD 215A WJ 18-55-21-406000880	7960	7880	8240	8700	11470	11020	11510	11700	11880	12120
15	06	08	Strc	W OF RGE RD 215 EJ 17-55-21-412000400	7960	7880	8240	8700	11470	11020	11510	11700	11880	12120
15	06	08	Strc	E OF RGE RD 215 EJ 17-55-21-412000400	7920	7840	8200	8660	11430	11010	11500	11690	11870	12070
15	06	08	Strc	W OF 830 N OF JOSEPHBURG WJ	7920	7840	8200	8660	11430	11010	11500	11690	11870	12070
15	06	12	Strc	E OF 830 N OF JOSEPHBURG WJ	6570	6870	7190	7590	8170	8150	8120	8120	8240	8660
15	06	16	Strc	W OF RGE RD 212 22-55-21-400000000	6570	6870	7190	7590	8170	8150	8120	8120	8240	8660
15	06	16	Strc	E OF RGE RD 212 22-55-21-400000000	6560	6860	7180	7580	8160	8100	8070	8070	8190	8650
15	06	16	Strc	6.7 KM W OF 15 & 45 SCOTFORD	6760	6960	7260	7640	8250	8080	8060	8110	8240	8630
15	06	16	Strc	W OF RGE RD 211 23-55-21-400000000	6500	6790	7090	7470	8050	8090	8060	8060	8180	8640
15	06	16	Strc	E OF RGE RD 211 23-55-21-400000000	6460	6750	7050	7430	8010	8140	8110	8110	8230	8560
15	06	16	Strc	W OF 830 NE OF FT SASK EJ	5940	6200	6490	6840	7760	7940	7900	7900	8020	8220
15	06	20	Strc	E OF 830 NE OF FT SASK EJ	4940	5160	5320	5610	5990	6180	6140	6140	6240	6420
15	06	20	Lamo	W OF 45 S OF BRUDERHEIM	4870	5090	5240	5540	5920	6120	6080	6080	6180	6360
15	08	04	Lamo	E OF 45 S OF BRUDERHEIM	4100	4190	4240	4380	4660	5520	5360	5380	5480	5550
15	08	04	Lamo	W OF RGE RD 202 22-55-20-400000000									5440	5510
15	08	04	Lamo	E OF RGE RD 202 22-55-20-400000000									5280	5360
15	08	04	Lamo	W OF 29 NW OF LAMONT	4060	4090	4140	4280	4560	5360	5180	5200	5240	5340
15	08	08	Lamo	E OF 29 NW OF LAMONT	2400	2730	2760	2840	2980	3180	3000	3020	3060	3120
15	08	08	Lamo	W OF 831 W OF LAMONT WJ	2430	2770	2800	2880	3020	3220	3060	3070	3110	3120
15	08	12	Lamo	E OF 831 W OF LAMONT WJ	2370	2560	2820	2860	3000	3180	3020	3090	3130	3140
15	08	12	Lamo	W OF 831 W OF LAMONT EJ	1090	1170	1190	1210	1270	1340	1340	1400	1420	1450
15	08	16	Lamo	E OF 831 W OF LAMONT EJ	1440	1440	1480	1460	1540	1640	1640	1680	1700	1860
15	08	16	Lamo	W OF 834 NW OF CHIPMAN	1290	1290	1340	1290	1400	1480	1480	1540	1570	1610
15	08	20	Lamo	E OF 834 NW OF CHIPMAN	1100	1100	1140	1200	1200	1260	1260	1320	1350	1340
15	08	20	Lamo	3.2 KM W OF 15 & 855 MUNDARE	780	780	810	820	870	920	910	970	990	1000
15	08	20	Lamo	W OF 855 AT MUNDARE NJ	940	950	980	1010	1040	1080	1040	1080	1100	1120
15	08	20	Lamo	S OF 855 AT MUNDARE NJ	2790	3070	3180	3290	3400	3490	3330	3440	3540	3620
15	08	20	Lamo	N OF 16 & 855 S OF MUNDARE	2440	2630	2730	2830	2930	3010	3280	3380	3000	3060
16	00	04	JNP	19.0 KM W OF 16 & 93 JASPER	2330	2480	2590	2710	2840	2790	2660	2790	2880	2900
16	02	04	Yelw	JASPER PARK GATES	3310	3440	3610	3780	4120	3950	3890	4080	4160	4260

ALBERTA HIGHWAYS 1 TO 986
TRAFFIC VOLUME, VEHICLE CLASSIFICATION, TRAVEL and ESAL STATISTICS REPORT
2012

Alberta Transportation
Planning Branch
Strategic and Network Planning

Produced: 27-Feb-2013 By CornerStone Solutions Inc.

						From	To	Length	Volume		Classifications						Travel MVKM		ESAL / Day / Dir		
Hwy	CS	TCS	Muni	From	To	Km	Km	in Km	WAADT	WASDT	%PV	%RV	%BU	%SU	%TT	%CM	Annual	Summer	SU	TC	Total
14	4	12	Strc	E OF 216 E OF EDMONTON	W OF 21 E OF BRETONA	0.000	7.853	7.853	13850	15200	89.1	0.7	0.2	4.3	5.7	10.2	39.8	18.3	262.3	818.3	1080.6
14	4			E OF 216 E OF EDMONTON	W OF 21 E OF BRETONA			7.853	13850	15200	89.1	0.7	0.2	4.3	5.7	10.2	39.8	18.3	262.3	818.3	1080.6
14	6	4	Strc	E OF 21 E OF BRETONA	W OF 824 NW OF COOKING LAKE	0.000	7.320	7.320	8670	9510	90.0	0.8	0.5	3.7	5.0	9.2	23.2	10.7	141.3	449.3	590.6
14	6	8	Strc	E OF 824 NW OF COOKING LAKE	W OF RGE RD 204 W OF TOFIELD	7.320	24.503	17.183	5870	6440	85.6	1.6	0.6	3.7	8.5	12.8	36.9	16.9	95.7	517.2	612.9
14	6	10	Strc	E OF RGE RD 204 W OF TOFIELD	W OF 630 & 833 W OF TOFIELD	24.503	31.895	7.392	4170	4580	82.4	1.5	0.3	5.0	10.8	16.1	11.3	5.2	91.8	466.8	558.6
14	6	12	Beav	E OF 630 & 833 W OF TOFIELD	TOFIELD	31.895	39.698	7.803	4730	5190	84.6	0.6	0.8	5.8	8.2	14.8	13.5	6.2	120.8	402.0	522.8
14	6			E OF 21 E OF BRETONA	TOFIELD			39.698	5846	6414	86.2	1.2	0.6	4.2	7.8	12.6	84.9	39.0	108.2	472.6	580.8
14	8	2	Beav	TOFIELD	W OF 834 AT TOFIELD WJ	0.000	0.126	0.126	4940	5420	83.8	0.7	0.5	4.2	10.8	15.5	0.2	0.1	91.4	553.0	644.4
14	8	4	Beav	E OF 834 AT TOFIELD WJ	W OF 834 E OF TOFIELD EJ	0.126	3.649	3.523	2830	3110	75.6	1.6	0.3	6.6	15.9	22.8	3.6	1.7	82.3	466.4	548.7
14	8	8	Beav	E OF 834 E OF TOFIELD EJ	W OF 854 W OF RYLEY WJ	3.649	18.909	15.260	3070	3360	80.2	1.0	0.6	4.5	13.7	18.8	17.1	7.8	60.9	435.9	496.8
14	8	12	Beav	E OF 854 W OF RYLEY WJ	W OF 854 AT RYLEY EJ	18.909	20.713	1.804	2670	2930	79.8	0.3	0.9	5.4	13.6	19.9	1.8	0.8	63.5	376.4	439.9
14	8	16	Beav	E OF 854 AT RYLEY EJ	W OF 855 SW OF HOLDEN	20.713	33.558	12.845	2160	2370	76.5	1.2	1.6	5.0	15.7	22.3	10.2	4.7	47.6	351.5	399.1
14	8			TOFIELD	W OF 855 SW OF HOLDEN			33.558	2682	2939	78.6	1.1	0.9	4.9	14.5	20.3	32.9	15.1	57.9	403.1	461.0
14	10	4	Beav	E OF 855 SW OF HOLDEN	W OF 857 W OF BRUCE	0.000	14.554	14.554	1780	1950	73.5	2.5	0.9	5.9	17.2	24.0	9.5	4.3	46.3	317.3	363.6
14	10	8	Beav	E OF 857 W OF BRUCE	W OF 36 SW OF VIKING	14.554	34.511	19.957	1880	2060	70.9	1.2	0.7	9.9	17.3	27.9	13.7	6.3	82.0	337.1	419.1
14	10			E OF 855 SW OF HOLDEN	W OF 36 SW OF VIKING			34.511	1838	2014	71.9	1.7	0.8	8.3	17.3	26.4	23.2	10.6	67.2	329.6	396.8
14	12	4	Beav	E OF 36 SW OF VIKING	N OF 26 NW OF KINSELLA	0.000	16.321	16.321	1790	1950	73.5	2.6	0.3	8.9	14.7	23.9	10.7	4.9	70.2	272.7	342.9
14	12	8	Beav	S OF 26 NW OF KINSELLA	W OF 870 AT KINSELLA WJ	16.321	20.340	4.019	2250	2480	67.3	3.4	0.3	7.7	21.3	29.3	3.3	1.5	76.3	496.7	573.0
14	12	12	Beav	E OF 870 E OF KINSELLA WJ	W OF 870 E OF KINSELLA EJ	20.340	21.113	0.773	2070	2290	68.0	4.0	0.4	9.0	18.6	28.0	0.6	0.3	82.1	399.1	481.2
14	12	16	Beav	E OF 870 E OF KINSELLA EJ	W OF JARROW	21.113	30.542	9.429	1660	1830	74.4	4.6	0.3	9.3	11.4	21.0	5.7	2.6	68.0	196.1	264.1
14	12			E OF 36 SW OF VIKING	W OF JARROW			30.542	1817	1991	72.6	3.3	0.3	8.8	15.0	24.1	20.3	9.3	70.4	282.5	352.9
14	14	4	Wain	W OF JARROW	W OF 881 W OF IRMA	0.000	12.307	12.307	1690	1860	77.6	2.0	0.6	6.3	13.5	20.4	7.6	3.5	46.9	236.5	283.4
14	14	8	Wain	E OF 881 W OF IRMA	W OF 883 W OF FABYAN	12.307	27.342	15.035	2460	2710	78.5	2.2	0.6	7.3	11.4	19.3	13.5	6.2	79.1	290.7	369.8
14	14	12	Wain	E OF 883 NW OF FABYAN	WAINWRIGHT W.C.L.	27.342	40.480	13.138	2740	3020	79.8	3.2	0.2	6.0	10.8	17.0	13.2	6.1	72.4	306.7	379.1
14	14	16	Wain	WAINWRIGHT W.C.L.	W OF 41 E OF WAINWRIGHT	40.480	43.720	3.240	4150	4570	87.3	2.6	0.2	4.6	5.3	10.1	4.9	2.3	84.1	228.0	312.1
14	14			W OF JARROW	W OF 41 E OF WAINWRIGHT			43.720	2453	2702	80.0	2.5	0.4	6.3	10.8	17.5	39.3	18.1	68.1	274.6	342.7
14	16	4	Wain	E OF 41 E OF WAINWRIGHT	W OF 610 NW OF HEATH	0.000	14.651	14.651	2500	2780	83.4	2.6	0.1	4.4	9.5	14.0	13.4	6.2	48.5	246.2	294.7
14	16	8	Wain	E OF 610 NW OF HEATH	W OF 894 E OF WAINWRIGHT WJ	14.651	21.190	6.539	1580	1780	81.0	3.7	0.2	4.9	10.2	15.3	3.8	1.8	34.1	167.0	201.1
14	16	12	Wain	E OF 894 E OF WAINWRIGHT WJ	W OF 894 N OF EDGERTON EJ	21.190	24.473	3.283	1560	1750	81.1	5.6	0.2	4.5	8.6	13.3	1.9	0.9	30.9	139.1	170.0
14	16	16	Wain	E OF 894 N OF EDGERTON EJ	W OF 897 NE OF EDGERTON	24.473	30.994	6.521	1130	1270	79.2	6.0	0.2	4.6	10.0	14.8	2.7	1.3	22.9	117.1	140.0
14	16	20	Wain	E OF 897 NE OF EDGERTON	W OF 17 SASK. BORDER WJ	30.994	52.352	21.358	760	860	73.3	3.8	0.3	4.9	17.7	22.9	5.9	2.8	16.4	139.4	155.8
14	16	24	Wain	E OF 17 SASK. BORDER WJ	W OF 17 SASK. BORDER EJ	52.352	54.793	2.441	1640	1850	67.4	2.4	0.2	5.5	24.5	30.2	1.5	0.7	39.7	416.5	456.2
14	16	28	Wain	E OF 17 SASK. BORDER EJ	SASKATCHEWAN BORDER	54.793	55.562	0.769	1120	1260	72.0	3.7	0.7	5.0	18.6	24.3	0.3	0.1	24.7	215.9	240.6
14	16			E OF 41 E OF WAINWRIGHT	SASKATCHEWAN BORDER			55.562	1450	1624	79.6	3.5	0.2	4.6	12.1	16.9	29.5	13.8	29.4	181.9	211.3
14				**EDMONTON E.C.L.**	**SASKATCHEWAN BORDER**			**246.361**	**3138**	**3448**	**82.3**	**1.7**	**0.5**	**5.3**	**10.2**	**16.0**	**282.9**	**130.0**	**73.3**	**331.8**	**405.1**
15	4	8	Stur	EDMONTON E.C.L.	S OF 37 W OF FT SASKATCHEWAN	0.000	2.840	2.840	11260	12320	91.6	0.5	0.5	4.0	3.4	7.9	11.7	5.4	198.4	396.8	595.2
15	4	12	Stur	E OF 37 W OF FT SASKATCHEWAN	FT SASKATCHEWAN W.C.L.	2.840	4.941	2.101	18500	20230	89.7	1.0	0.4	3.8	5.1	9.3	14.2	6.5	309.7	977.9	1287.6
15	4			EDMONTON E.C.L.	FT SASKATCHEWAN W.C.L.			4.941	14339	15683	90.6	0.8	0.4	3.9	4.3	8.6	25.9	11.9	246.3	639.1	885.4
15	6	8	Strc	FT SASKATCHEWAN E.C.L.	W OF 830 NE OF JOSEPHBURG WJ	0.000	4.124	4.124	12120	13120	84.6	1.3	0.4	5.0	8.7	14.1	18.3	8.3	266.9	1092.9	1359.8
15	6	12	Strc	W OF 830 NE OF JOSEPHBURG WJ	KM 5.686	4.124	5.690	1.566	8660	9370	82.0	0.5	0.5	5.2	11.8	17.5	5.0	2.2	198.4	1059.2	1257.6
15	6	16	Strc	KM 5.686	W OF 830 SW OF BRUDERHEIM EJ	5.690	10.875	5.185	8590	9300	79.9	2.7	0.2	3.9	13.3	17.4	16.3	7.4	147.6	1184.2	1331.8
15	6	20	Strc	E OF 830 SW OF BRUDERHEIM EJ	W OF 45 S OF BRUDERHEIM	10.875	14.135	3.260	6390	6920	82.9	1.4	0.4	4.6	10.7	15.7	7.6	3.5	129.5	708.7	838.2
15	6			FT SASKATCHEWAN E.C.L.	W OF 45 S OF BRUDERHEIM			14.135	9120	9873	82.5	1.7	0.3	4.6	10.9	15.8	47.2	21.4	184.8	1030.4	1215.2

Turning Movement Summary Diagram

Reference No.: 97552

Intersection of:
15 & RGE RD 220 12-55-22-400000220

2012 AADT / ASDT ESTIMATES

North On Rge Rd 220		
Vehicle Type	**Vol**	**%**
A: Passenger Vehicle	391	93.1
B: Recreational Vehicle	2	0.5
S: Bus	0	0.0
D: Single Unit Truck	21	5.0
E: Tractor Trailer Unit	6	1.4
ASDT 450	**AADT** 420	

West On 15		
Vehicle Type	**Vol**	**%**
A: Passenger Vehicle	10874	86.9
B: Recreational Vehicle	96	0.8
S: Bus	86	0.7
D: Single Unit Truck	487	3.9
E: Tractor Trailer Unit	967	7.7
ASDT 13540	**AADT** 12510	

East On 15		
Vehicle Type	**Vol**	**%**
A: Passenger Vehicle	10514	86.5
B: Recreational Vehicle	94	0.8
S: Bus	86	0.7
D: Single Unit Truck	495	4.1
E: Tractor Trailer Unit	961	7.9
ASDT 13150	**AADT** 12150	

South On Rge Rd 220		
Vehicle Type	**Vol**	**%**
A: Passenger Vehicle	43	71.7
B: Recreational Vehicle	0	0.0
S: Bus	0	0.0
D: Single Unit Truck	17	28.3
E: Tractor Trailer Unit	0	0.0
ASDT 70	**AADT** 60	

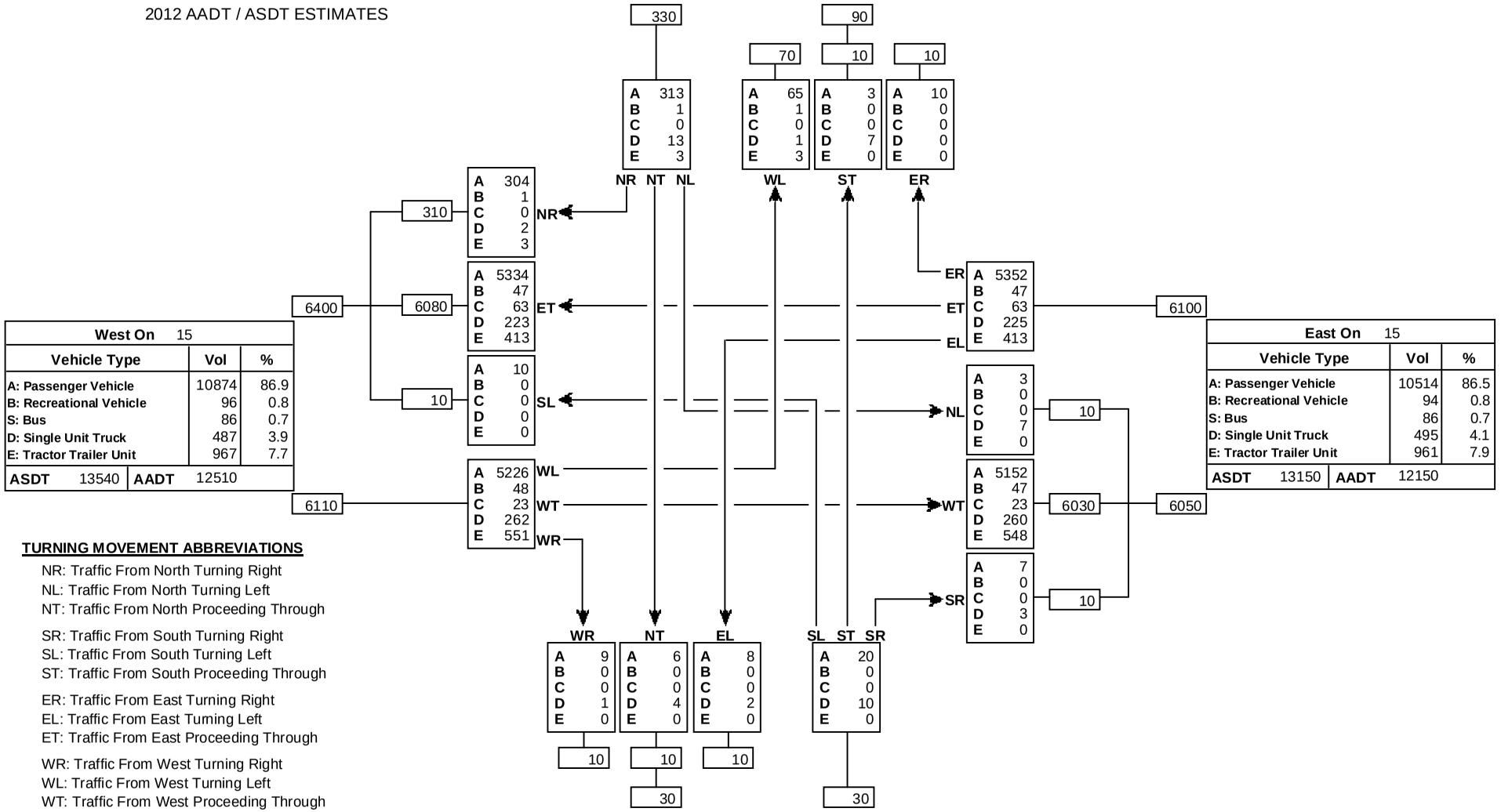

TURNING MOVEMENT ABBREVIATIONS

NR: Traffic From North Turning Right
NL: Traffic From North Turning Left
NT: Traffic From North Proceeding Through

SR: Traffic From South Turning Right
SL: Traffic From South Turning Left
ST: Traffic From South Proceeding Through

ER: Traffic From East Turning Right
EL: Traffic From East Turning Left
ET: Traffic From East Proceeding Through

WR: Traffic From West Turning Right
WL: Traffic From West Turning Left
WT: Traffic From West Proceeding Through

TURNING MOVEMENT ABBREVIATIONS

AADT: Average Annual Daily Traffic
Average daily traffic expressed as vehicles per day fo
period of January 1 to December 31 (365 days)

ASDT: Average Summer Daily Traffic
Average daily traffic expressed as vehicles per day fo
period of May 1 to September 30 (153 days)

Turning Movement Summary Diagram

Reference No.: 97552

Intersection of:
15 & RGE RD 220 12-55-22-400000220

2012 a.m. 100th Highest Hour ESTIMATES

North On Rge Rd 220		
Vehicle Type	**Vol**	**%**
A: Passenger Vehicle	14	93.3
B: Recreational Vehicle	0	0.0
S: Bus	0	0.0
D: Single Unit Truck	1	6.7
E: Tractor Trailer Unit	0	0.0
Total	15	

West On 15		
Vehicle Type	**Vol**	**%**
A: Passenger Vehicle	1158	92.2
B: Recreational Vehicle	3	0.2
S: Bus	7	0.6
D: Single Unit Truck	37	2.9
E: Tractor Trailer Unit	51	4.1
Total	1256	

East On 15		
Vehicle Type	**Vol**	**%**
A: Passenger Vehicle	1144	92.1
B: Recreational Vehicle	3	0.2
S: Bus	7	0.6
D: Single Unit Truck	37	3.0
E: Tractor Trailer Unit	51	4.1
Total	1242	

South On Rge Rd 220		
Vehicle Type	**Vol**	**%**
A: Passenger Vehicle	2	66.7
B: Recreational Vehicle	0	0.0
S: Bus	0	0.0
D: Single Unit Truck	1	33.3
E: Tractor Trailer Unit	0	0.0
Total	3	

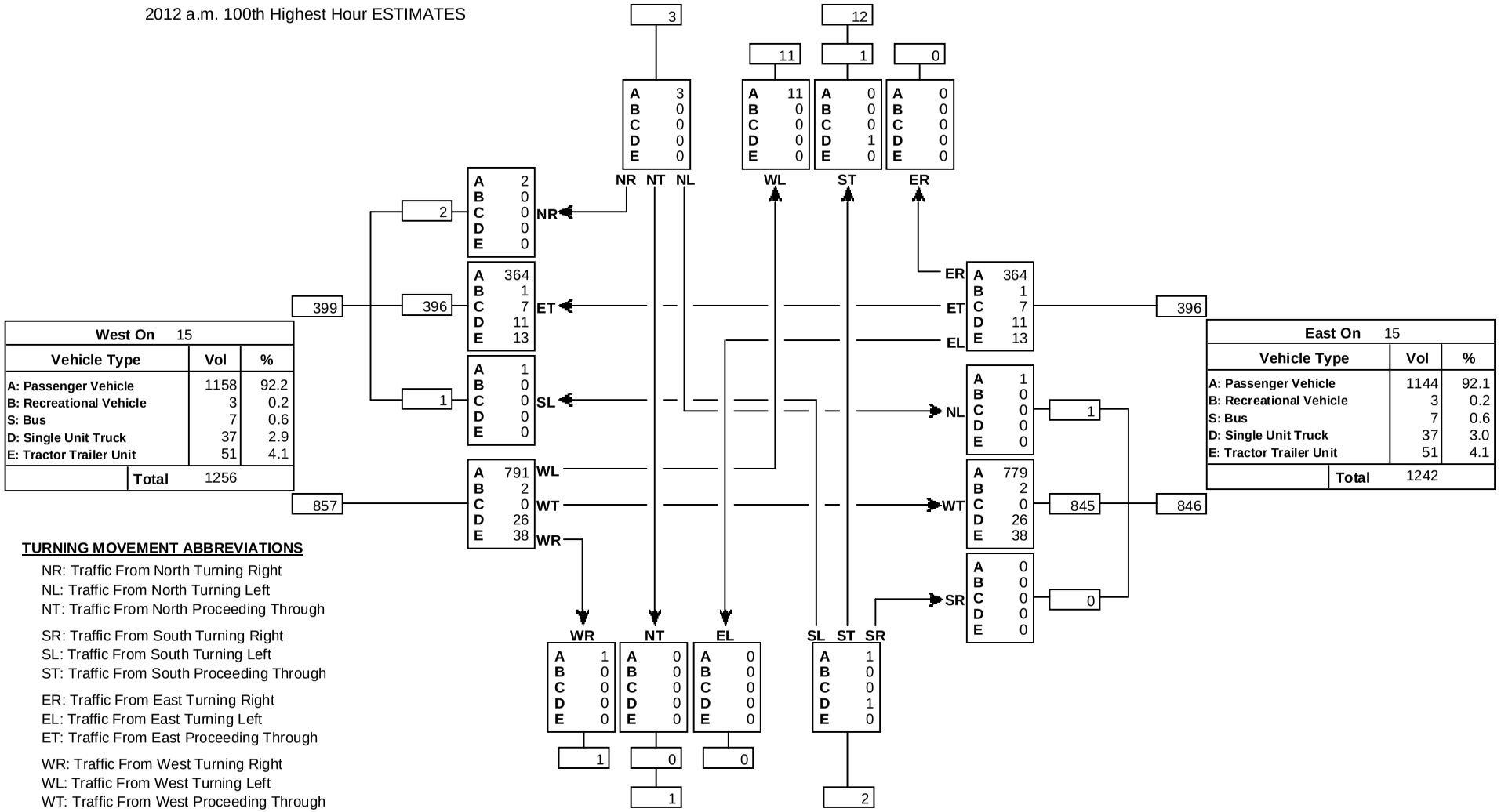

TURNING MOVEMENT ABBREVIATIONS

NR: Traffic From North Turning Right
NL: Traffic From North Turning Left
NT: Traffic From North Proceeding Through

SR: Traffic From South Turning Right
SL: Traffic From South Turning Left
ST: Traffic From South Proceeding Through

ER: Traffic From East Turning Right
EL: Traffic From East Turning Left
ET: Traffic From East Proceeding Through

WR: Traffic From West Turning Right
WL: Traffic From West Turning Left
WT: Traffic From West Proceeding Through

Turning Movement Summary Diagram

Reference No.: 97552

Intersection of:
15 & RGE RD 220 12-55-22-400000220

2012 p.m. 100th Highest Hour ESTIMATES

North On Rge Rd 220		
Vehicle Type	**Vol**	**%**
A: Passenger Vehicle	112	100.0
B: Recreational Vehicle	0	0.0
S: Bus	0	0.0
D: Single Unit Truck	0	0.0
E: Tractor Trailer Unit	0	0.0
Total	112	

West On 15		
Vehicle Type	**Vol**	**%**
A: Passenger Vehicle	1180	93.7
B: Recreational Vehicle	5	0.4
S: Bus	25	2.0
D: Single Unit Truck	19	1.5
E: Tractor Trailer Unit	30	2.4
Total	1259	

East On 15		
Vehicle Type	**Vol**	**%**
A: Passenger Vehicle	1069	93.2
B: Recreational Vehicle	5	0.4
S: Bus	25	2.2
D: Single Unit Truck	18	1.6
E: Tractor Trailer Unit	30	2.6
Total	1147	

South On Rge Rd 220		
Vehicle Type	**Vol**	**%**
A: Passenger Vehicle	7	87.5
B: Recreational Vehicle	0	0.0
S: Bus	0	0.0
D: Single Unit Truck	1	12.5
E: Tractor Trailer Unit	0	0.0
Total	8	

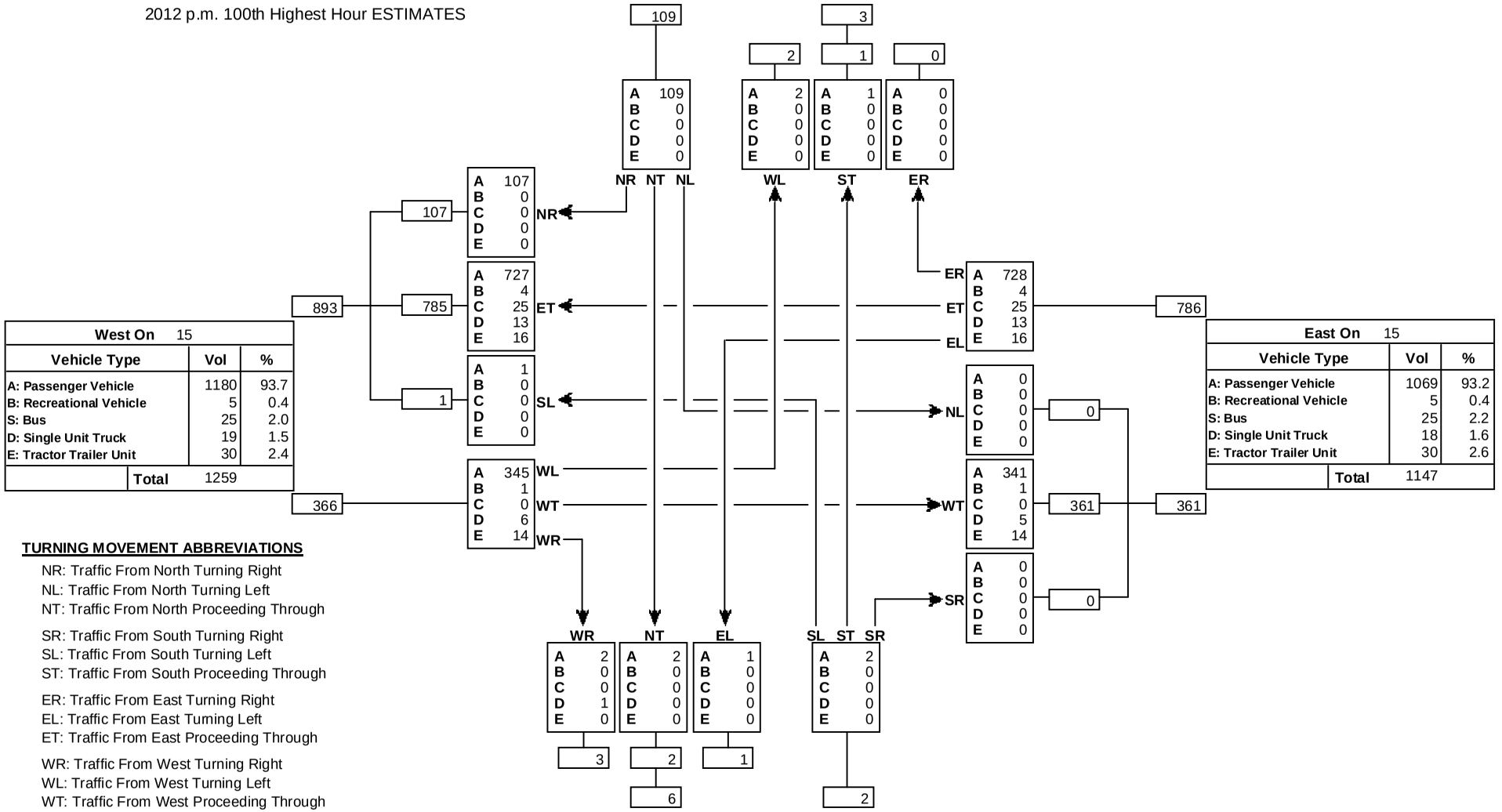

TURNING MOVEMENT ABBREVIATIONS

NR: Traffic From North Turning Right
NL: Traffic From North Turning Left
NT: Traffic From North Proceeding Through

SR: Traffic From South Turning Right
SL: Traffic From South Turning Left
ST: Traffic From South Proceeding Through

ER: Traffic From East Turning Right
EL: Traffic From East Turning Left
ET: Traffic From East Proceeding Through

WR: Traffic From West Turning Right
WL: Traffic From West Turning Left
WT: Traffic From West Proceeding Through

Turning Movement Summary Diagram

Reference No.: 98550

Intersection of:
15 & 830 N OF JOSEPHBURG WJ

2012 AADT / ASDT ESTIMATES

North On Rge Rd 214		
Vehicle Type	**Vol**	**%**
A: Passenger Vehicle	5337	89.7
B: Recreational Vehicle	1	0.0
S: Bus	14	0.2
D: Single Unit Truck	288	4.8
E: Tractor Trailer Unit	310	5.2
ASDT 6440	**AADT** 5950	

West On 15		
Vehicle Type	**Vol**	**%**
A: Passenger Vehicle	10478	86.8
B: Recreational Vehicle	18	0.1
S: Bus	44	0.4
D: Single Unit Truck	539	4.5
E: Tractor Trailer Unit	991	8.2
ASDT 13060	**AADT** 12070	

East On 15		
Vehicle Type	**Vol**	**%**
A: Passenger Vehicle	7051	81.4
B: Recreational Vehicle	26	0.3
S: Bus	44	0.5
D: Single Unit Truck	378	4.4
E: Tractor Trailer Unit	1161	13.4
ASDT 9370	**AADT** 8660	

South On 830		
Vehicle Type	**Vol**	**%**
A: Passenger Vehicle	1798	76.2
B: Recreational Vehicle	9	0.4
S: Bus	18	0.8
D: Single Unit Truck	115	4.9
E: Tractor Trailer Unit	420	17.8
ASDT 2550	**AADT** 2360	

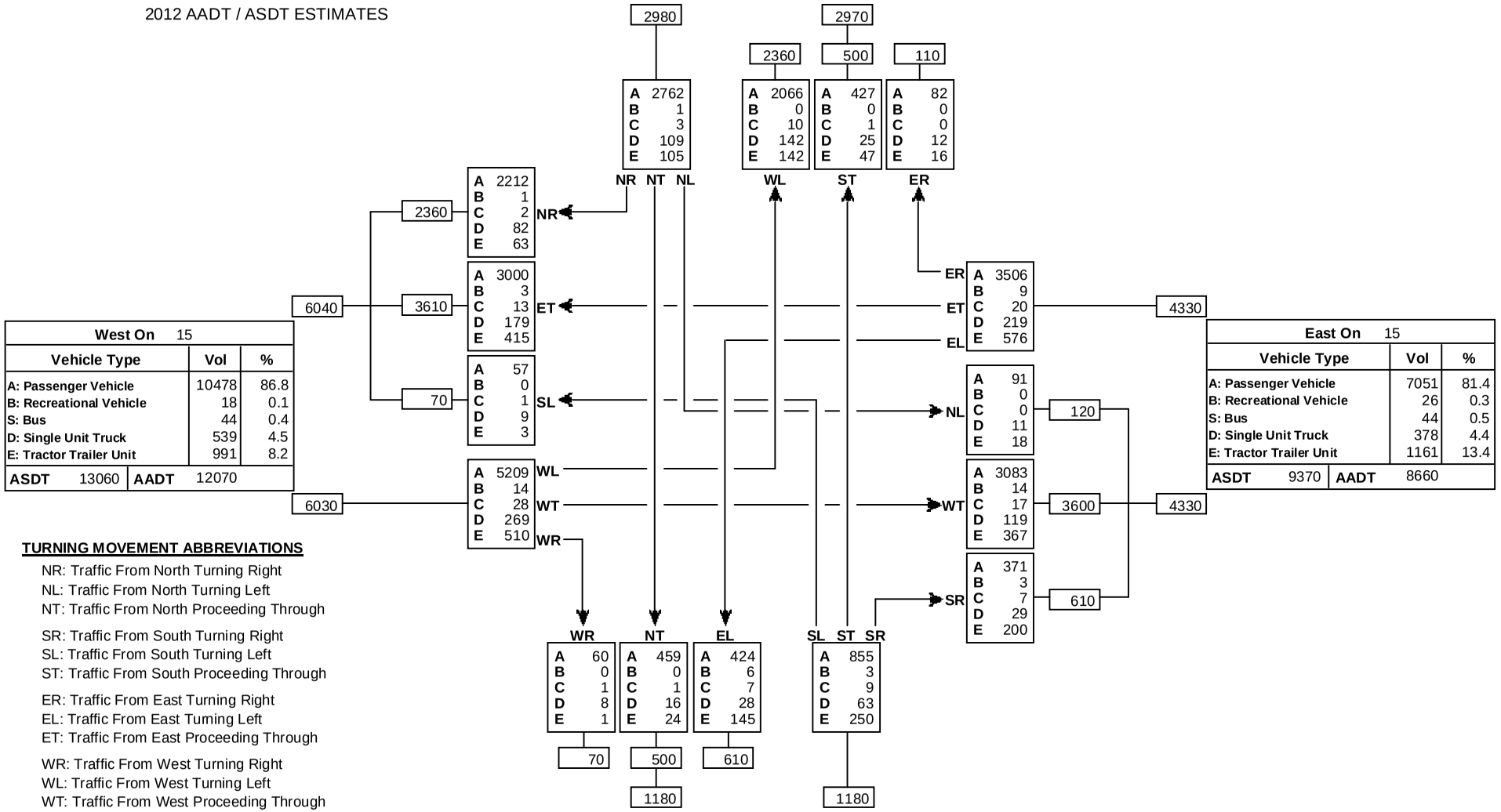

TURNING MOVEMENT ABBREVIATIONS

NR: Traffic From North Turning Right
NL: Traffic From North Turning Left
NT: Traffic From North Proceeding Through

SR: Traffic From South Turning Right
SL: Traffic From South Turning Left
ST: Traffic From South Proceeding Through

ER: Traffic From East Turning Right
EL: Traffic From East Turning Left
ET: Traffic From East Proceeding Through

WR: Traffic From West Turning Right
WL: Traffic From West Turning Left
WT: Traffic From West Proceeding Through

TURNING MOVEMENT ABBREVIATIONS

AADT: Average Annual Daily Traffic
Average daily traffic expressed as vehicles per day fo
period of January 1 to December 31 (365 days)

ASDT: Average Summer Daily Traffic
Average daily traffic expressed as vehicles per day fo
period of May 1 to September 30 (153 days)

Turning Movement Summary Diagram

Reference No.: 98550

Intersection of:
15 & 830 N OF JOSEPHBURG WJ

2012 a.m. 100th Highest Hour ESTIMATES

North On Rge Rd 214		
Vehicle Type	**Vol**	**%**
A: Passenger Vehicle	929	96.2
B: Recreational Vehicle	0	0.0
S: Bus	1	0.1
D: Single Unit Truck	16	1.7
E: Tractor Trailer Unit	20	2.1
Total	966	

West On 15		
Vehicle Type	**Vol**	**%**
A: Passenger Vehicle	1124	92.7
B: Recreational Vehicle	0	0.0
S: Bus	3	0.2
D: Single Unit Truck	31	2.6
E: Tractor Trailer Unit	55	4.5
Total	1213	

East On 15		
Vehicle Type	**Vol**	**%**
A: Passenger Vehicle	502	85.5
B: Recreational Vehicle	0	0.0
S: Bus	3	0.5
D: Single Unit Truck	21	3.6
E: Tractor Trailer Unit	61	10.4
Total	587	

South On 830		
Vehicle Type	**Vol**	**%**
A: Passenger Vehicle	259	88.1
B: Recreational Vehicle	0	0.0
S: Bus	3	1.0
D: Single Unit Truck	10	3.4
E: Tractor Trailer Unit	22	7.5
Total	294	

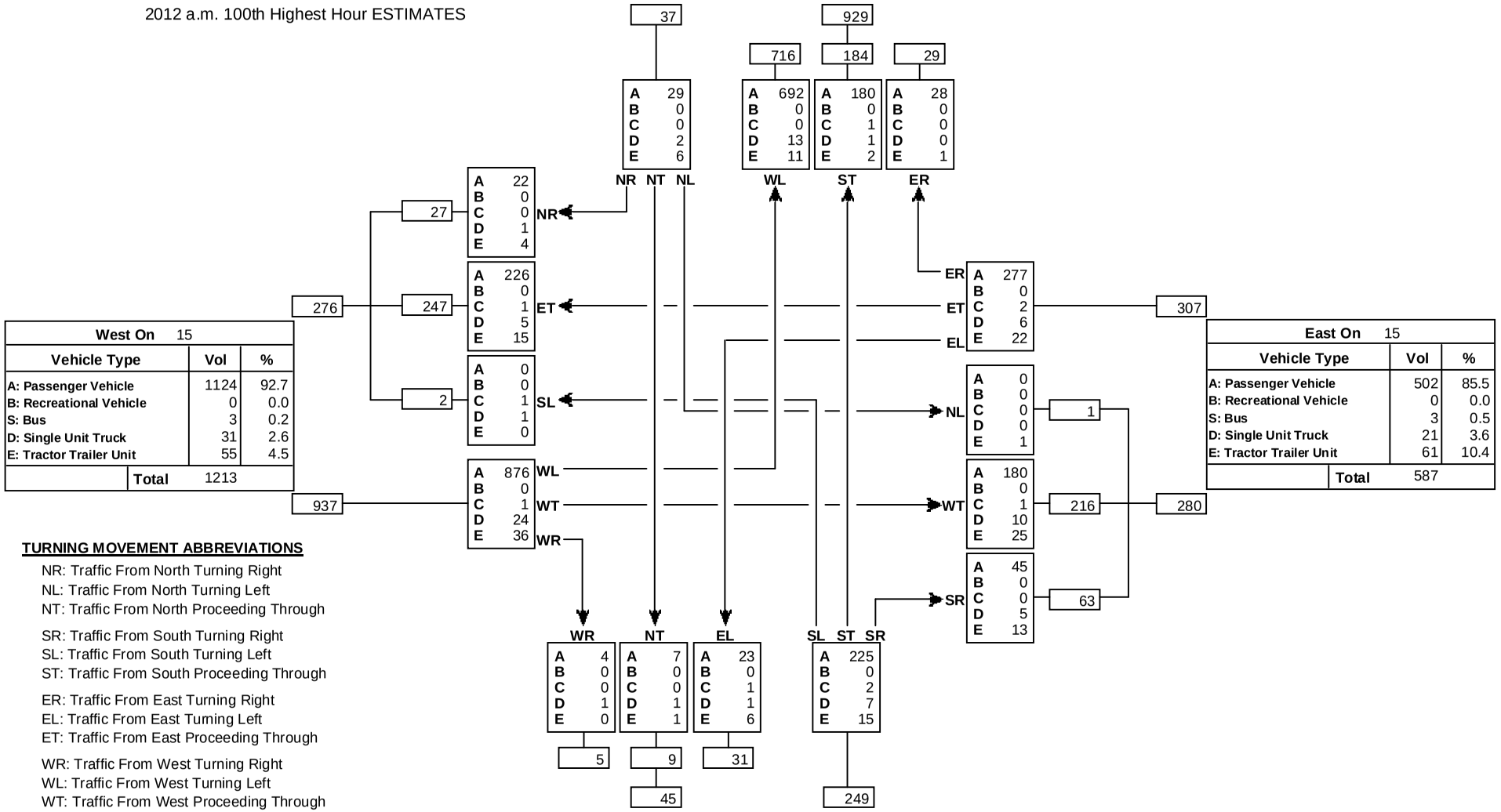

TURNING MOVEMENT ABBREVIATIONS

NR: Traffic From North Turning Right
NL: Traffic From North Turning Left
NT: Traffic From North Proceeding Through

SR: Traffic From South Turning Right
SL: Traffic From South Turning Left
ST: Traffic From South Proceeding Through

ER: Traffic From East Turning Right
EL: Traffic From East Turning Left
ET: Traffic From East Proceeding Through

WR: Traffic From West Turning Right
WL: Traffic From West Turning Left
WT: Traffic From West Proceeding Through

Turning Movement Summary Diagram

Reference No.: 98550

Intersection of:
15 & 830 N OF JOSEPHBURG WJ

2012 p.m. 100th Highest Hour ESTIMATES

North On Rge Rd 214		
Vehicle Type	**Vol**	**%**
A: Passenger Vehicle	929	98.4
B: Recreational Vehicle	1	0.1
S: Bus	1	0.1
D: Single Unit Truck	7	0.7
E: Tractor Trailer Unit	6	0.6
Total	944	

West On 15		
Vehicle Type	**Vol**	**%**
A: Passenger Vehicle	1149	94.6
B: Recreational Vehicle	1	0.1
S: Bus	1	0.1
D: Single Unit Truck	22	1.8
E: Tractor Trailer Unit	41	3.4
Total	1214	

East On 15		
Vehicle Type	**Vol**	**%**
A: Passenger Vehicle	458	86.7
B: Recreational Vehicle	1	0.2
S: Bus	0	0.0
D: Single Unit Truck	20	3.8
E: Tractor Trailer Unit	49	9.3
Total	528	

South On 830		
Vehicle Type	**Vol**	**%**
A: Passenger Vehicle	194	91.5
B: Recreational Vehicle	1	0.5
S: Bus	0	0.0
D: Single Unit Truck	5	2.4
E: Tractor Trailer Unit	12	5.7
Total	212	

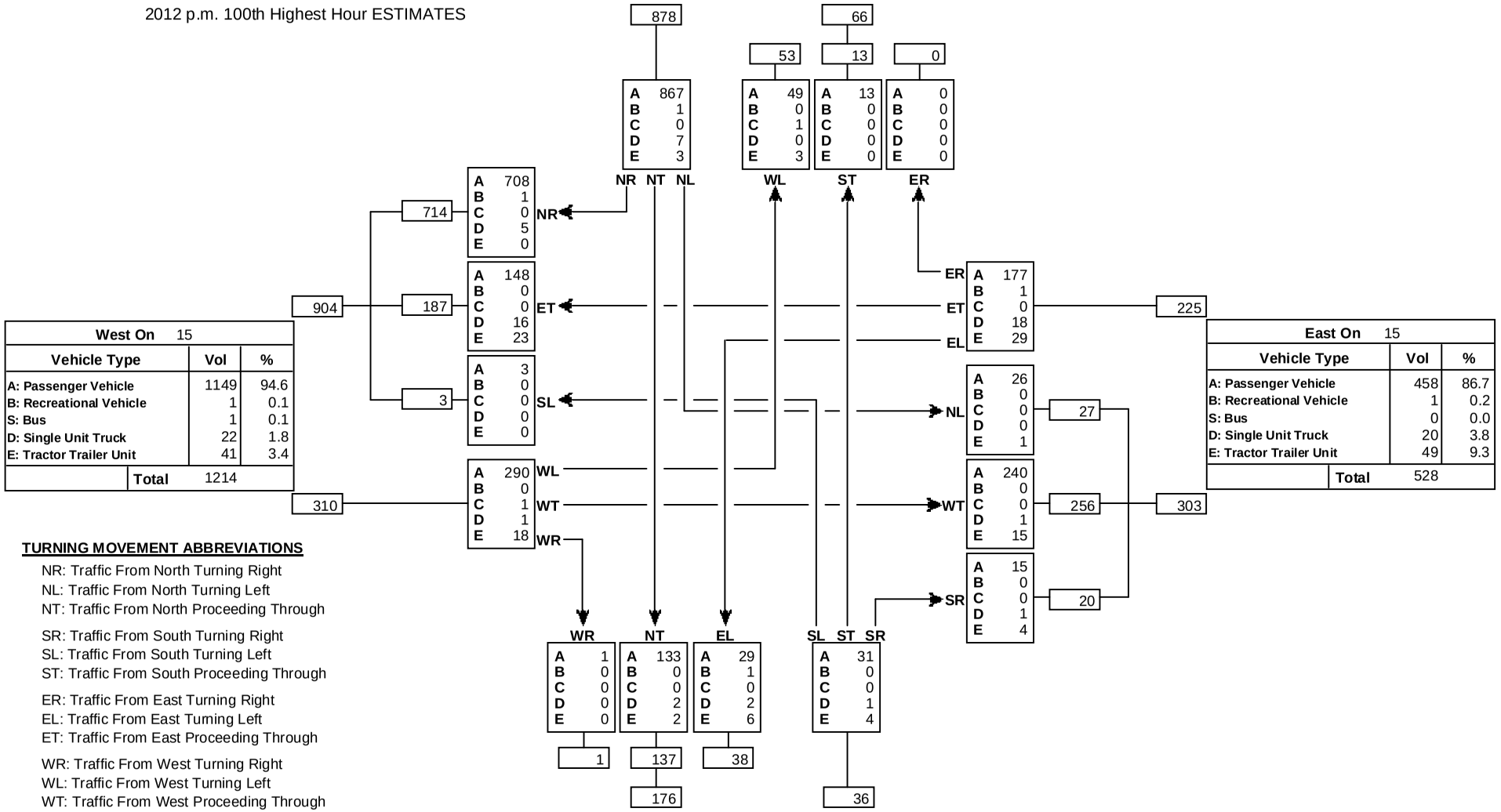

TURNING MOVEMENT ABBREVIATIONS

NR: Traffic From North Turning Right
NL: Traffic From North Turning Left
NT: Traffic From North Proceeding Through

SR: Traffic From South Turning Right
SL: Traffic From South Turning Left
ST: Traffic From South Proceeding Through

ER: Traffic From East Turning Right
EL: Traffic From East Turning Left
ET: Traffic From East Proceeding Through

WR: Traffic From West Turning Right
WL: Traffic From West Turning Left
WT: Traffic From West Proceeding Through

APPENDIX G

2013 Turning Movement Diagrams (AADT, AM Peak, PM Peak)

Turning Movement Summary Diagram

Intersection of: Hwy. 15 & Rge. Rd. 220

2013 AADT

factored based on a permanent traffic counter on Hwy. 15, West of Hwy. 45

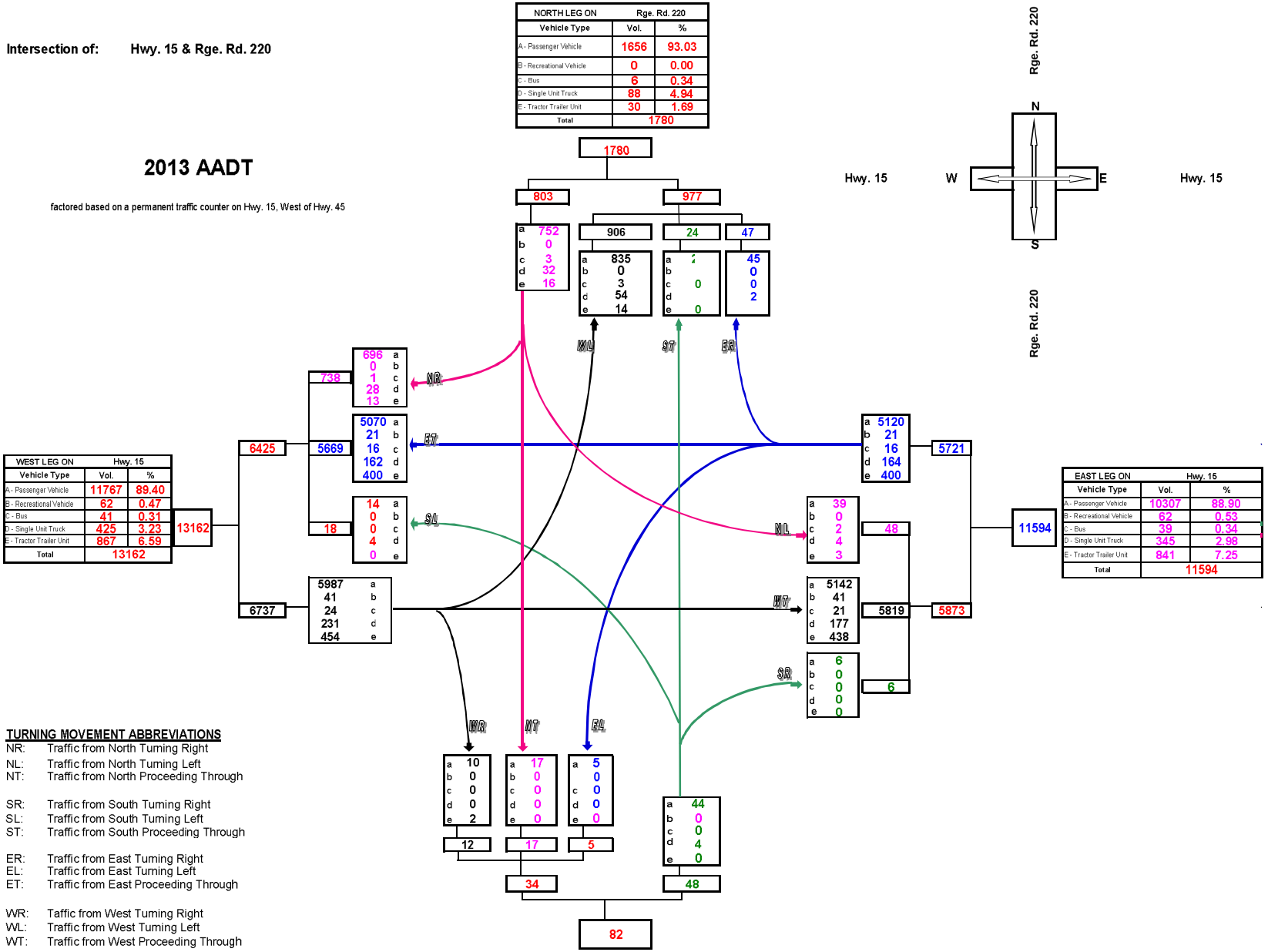

NORTH LEG ON	Rge. Rd. 220	
Vehicle Type	Vol.	%
A - Passenger Vehicle	1656	93.03
B - Recreational Vehicle	0	0.00
C - Bus	6	0.34
D - Single Unit Truck	88	4.94
E - Tractor Trailer Unit	30	1.69
Total	1780	

WEST LEG ON	Hwy. 15	
Vehicle Type	Vol.	%
A - Passenger Vehicle	11767	89.40
B - Recreational Vehicle	62	0.47
C - Bus	41	0.31
D - Single Unit Truck	425	3.23
E - Tractor Trailer Unit	867	6.59
Total	13162	

EAST LEG ON	Hwy. 15	
Vehicle Type	Vol.	%
A - Passenger Vehicle	10307	88.90
B - Recreational Vehicle	62	0.53
C - Bus	39	0.34
D - Single Unit Truck	345	2.98
E - Tractor Trailer Unit	841	7.25
Total	11594	

SOUTH LEG ON	Rge. Rd. 220	
Vehicle Type	Vol.	%
A - Passenger Vehicle	76	92.68
B - Recreational Vehicle	0	0.00
C - Bus	0	0.00
D - Single Unit Truck	4	4.88
E - Tractor Trailer Unit	2	2.44
Total	82	

TURNING MOVEMENT ABBREVIATIONS

NR: Traffic from North Turning Right
NL: Traffic from North Turning Left
NT: Traffic from North Proceeding Through

SR: Traffic from South Turning Right
SL: Traffic from South Turning Left
ST: Traffic from South Proceeding Through

ER: Traffic from East Turning Right
EL: Traffic from East Turning Left
ET: Traffic from East Proceeding Through

WR: Taffic from West Turning Right
WL: Traffic from West Turning Left
WT: Traffic from West Proceeding Through

AADT: Average Annual Daily Traffic
Average daily traffic expressed as vehicles per day for period of January 1 to December 31 (365 days)

ASDT: Average Summer Daily Traffic
Average daily traffic expressed as vehilces per day for period of May 1 to September 30 (153 days)

Stewart Weir

Turning Movement Summary Diagram

Intersection of: Hwy. 15 & Rge. Rd. 220

2013 AM Peak Hour

(Peak AM hour from 6:00 - 7:00)

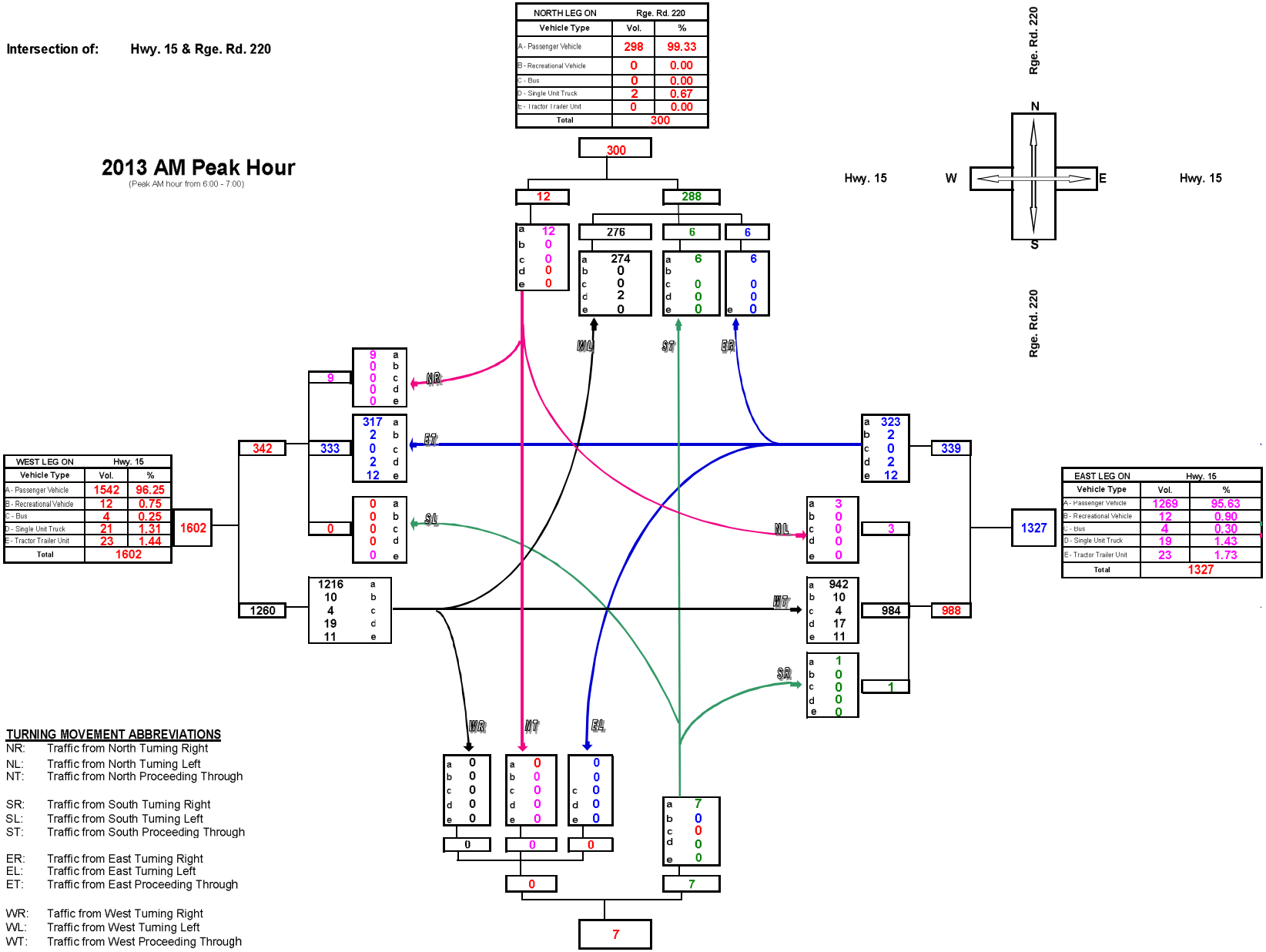

NORTH LEG ON	Rge. Rd. 220	
Vehicle Type	Vol.	%
A - Passenger Vehicle	298	99.33
B - Recreational Vehicle	0	0.00
C - Bus	0	0.00
D - Single Unit Truck	2	0.67
E - Tractor Trailer Unit	0	0.00
Total	300	

WEST LEG ON	Hwy. 15	
Vehicle Type	Vol.	%
A - Passenger Vehicle	1542	96.25
B - Recreational Vehicle	12	0.75
C - Bus	4	0.25
D - Single Unit Truck	21	1.31
E - Tractor Trailer Unit	23	1.44
Total	1602	

EAST LEG ON	Hwy. 15	
Vehicle Type	Vol.	%
A - Passenger Vehicle	1269	95.63
B - Recreational Vehicle	12	0.90
C - Bus	4	0.30
D - Single Unit Truck	19	1.43
E - Tractor Trailer Unit	23	1.73
Total	1327	

SOUTH LEG ON	Rge. Rd. 220	
Vehicle Type	Vol.	%
A - Passenger Vehicle	7	100.00
B - Recreational Vehicle	0	0.00
C - Bus	0	0.00
D - Single Unit Truck	0	0.00
E - Tractor Trailer Unit	0	0.00
Total	7	

TURNING MOVEMENT ABBREVIATIONS

NR: Traffic from North Turning Right
NL: Traffic from North Turning Left
NT: Traffic from North Proceeding Through

SR: Traffic from South Turning Right
SL: Traffic from South Turning Left
ST: Traffic from South Proceeding Through

ER: Traffic from East Turning Right
EL: Traffic from East Turning Left
ET: Traffic from East Proceeding Through

WR: Taffic from West Turning Right
WL: Traffic from West Turning Left
WT: Traffic from West Proceeding Through

AADT: Average Annual Daily Traffic
Average daily traffic expressed as vehicles per day for period of January 1 to December 31 (365 days)

ASDT: Average Summer Daily Traffic
Average daily traffic expressed as vehilces per day for period of May 1 to September 30 (153 days)

Stewart Weir

Turning Movement Summary Diagram

Intersection of: Hwy. 15 & Rge. Rd. 220

2013 PM Peak Hour

(Peak AM hour from 17:00 - 18:00)

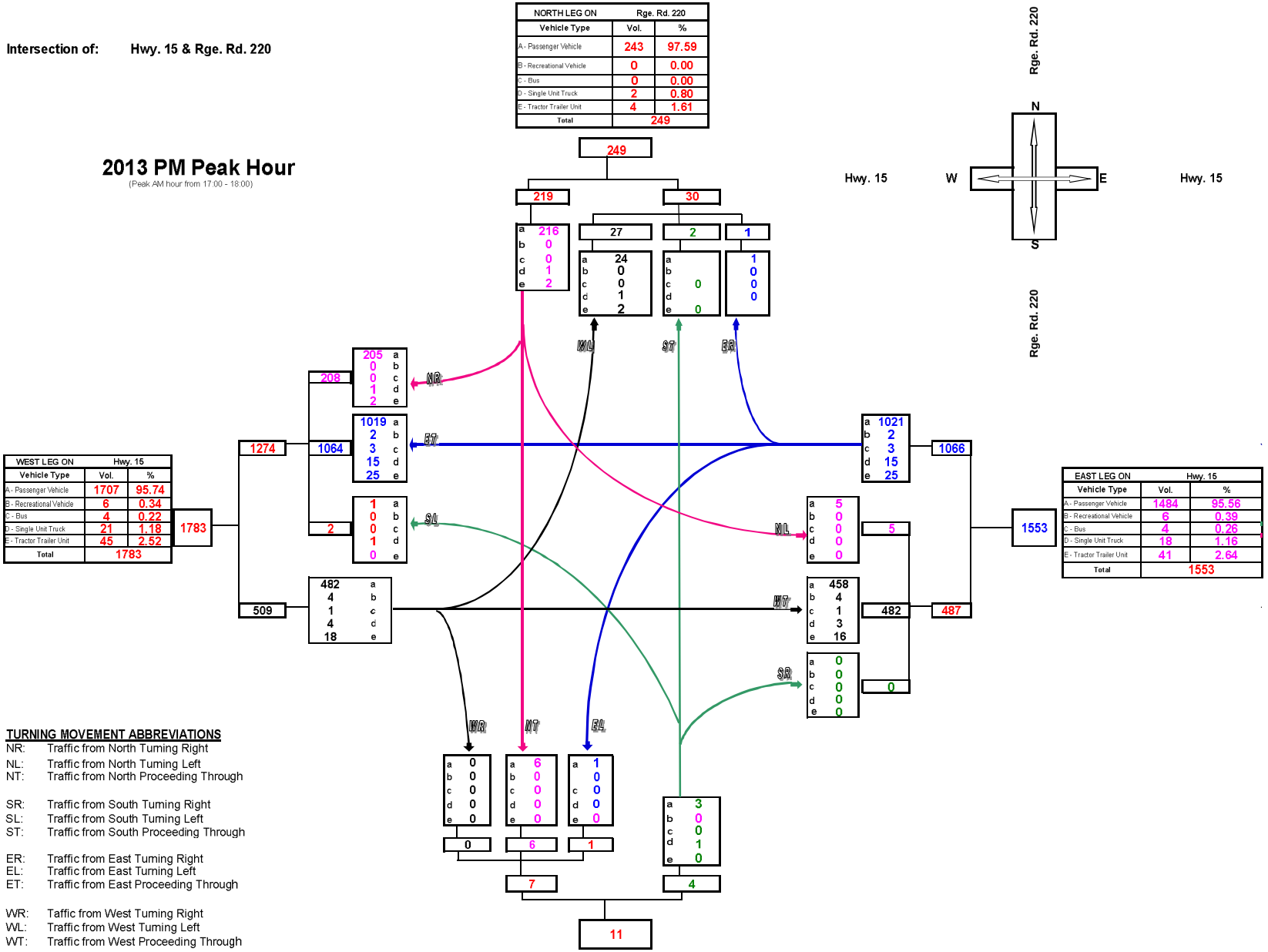

TURNING MOVEMENT ABBREVIATIONS

NR: Traffic from North Turning Right
NL: Traffic from North Turning Left
NT: Traffic from North Proceeding Through

SR: Traffic from South Turning Right
SL: Traffic from South Turning Left
ST: Traffic from South Proceeding Through

ER: Traffic from East Turning Right
EL: Traffic from East Turning Left
ET: Traffic from East Proceeding Through

WR: Taffic from West Turning Right
WL: Traffic from West Turning Left
WT: Traffic from West Proceeding Through

AADT: Average Annual Daily Traffic
Average daily traffic expressed as vehicles per day for period of January 1 to December 31 (365 days)

ASDT: Average Summer Daily Traffic
Average daily traffic expressed as vehilces per day for period of May 1 to September 30 (153 days)

Stewart Weir

Turning Movement Summary Diagram

Intersection of: Hwy. 15 & Rge. Rd. 214

2013 AADT

factored based on a permanent traffic counter on Hwy. 15, West of Hwy. 45

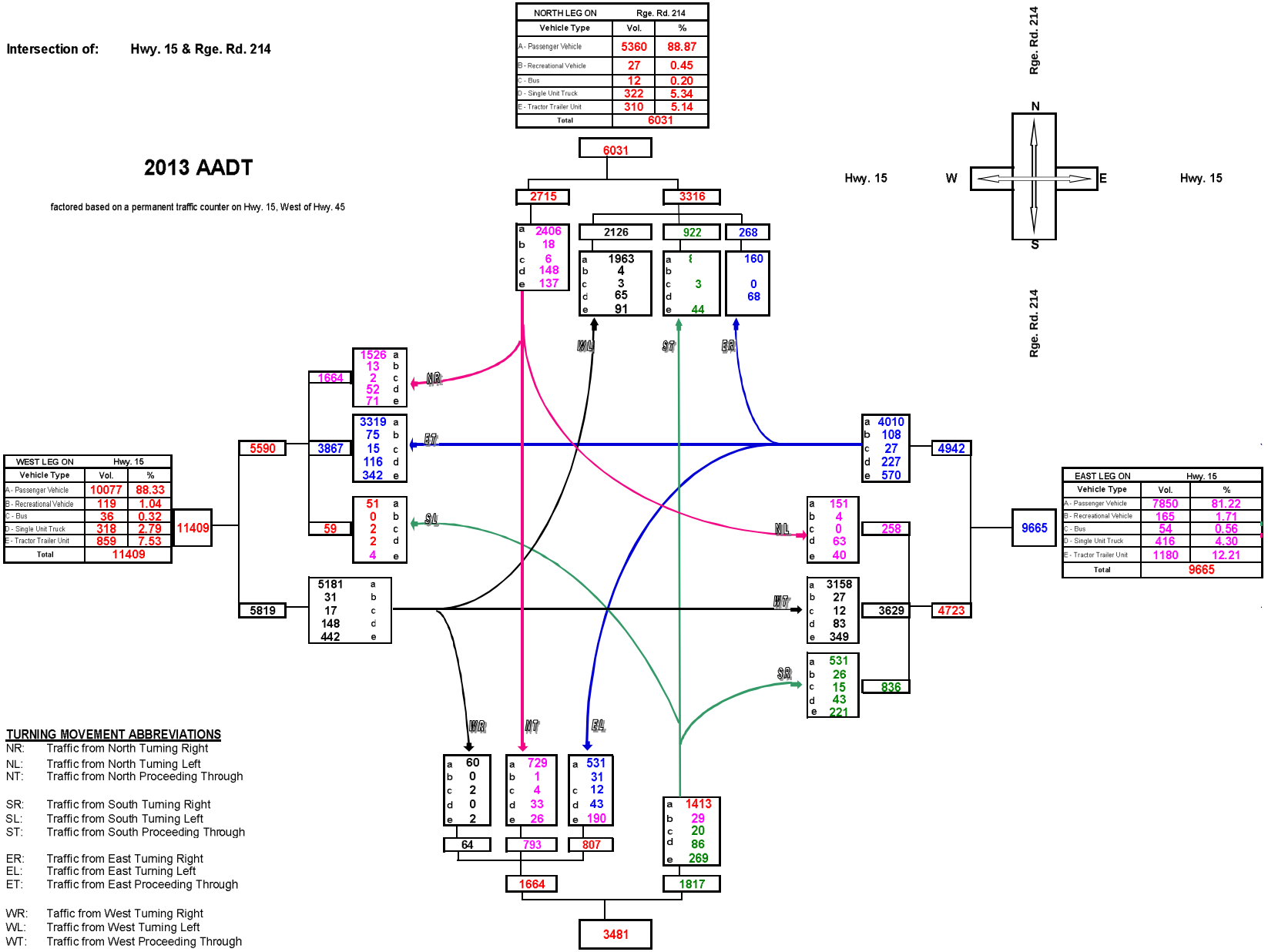

TURNING MOVEMENT ABBREVIATIONS

NR: Traffic from North Turning Right
NL: Traffic from North Turning Left
NT: Traffic from North Proceeding Through

SR: Traffic from South Turning Right
SL: Traffic from South Turning Left
ST: Traffic from South Proceeding Through

ER: Traffic from East Turning Right
EL: Traffic from East Turning Left
ET: Traffic from East Proceeding Through

WR: Taffic from West Turning Right
WL: Traffic from West Turning Left
WT: Traffic from West Proceeding Through

AADT: Average Annual Daily Traffic
Average daily traffic expressed as vehicles per day for period of January 1 to December 31 (365 days)

ASDT: Average Summer Daily Traffic
Average daily traffic expressed as vehilces per day for period of May 1 to September 30 (153 days)

Stewart Weir

Turning Movement Summary Diagram

Intersection of: Hwy. 15 & Rge. Rd. 214

2013 AM Peak Hour

(Peak AM hour from 6:00 - 7:00)

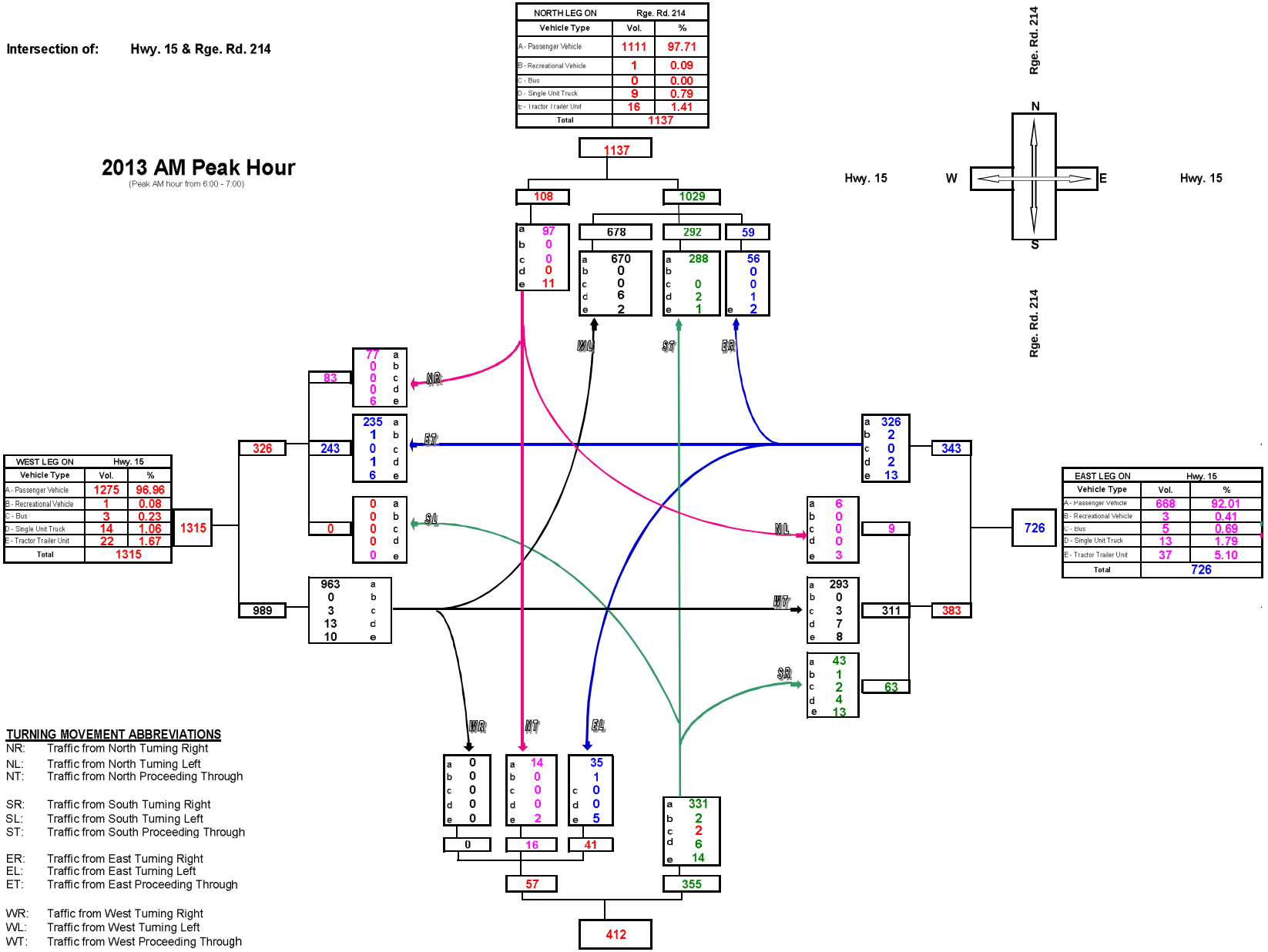

TURNING MOVEMENT ABBREVIATIONS

NR: Traffic from North Turning Right
NL: Traffic from North Turning Left
NT: Traffic from North Proceeding Through

SR: Traffic from South Turning Right
SL: Traffic from South Turning Left
ST: Traffic from South Proceeding Through

ER: Traffic from East Turning Right
EL: Traffic from East Turning Left
ET: Traffic from East Proceeding Through

WR: Taffic from West Turning Right
WL: Traffic from West Turning Left
WT: Traffic from West Proceeding Through

AADT: Average Annual Daily Traffic
Average daily traffic expressed as vehicles per day for period of January 1 to December 31 (365 days)

ASDT: Average Summer Daily Traffic
Average daily traffic expressed as vehilces per day for period of May 1 to September 30 (153 days)

Stewart Weir

Turning Movement Summary Diagram

Intersection of: Hwy. 15 & Rge. Rd. 214

2013 PM Peak Hour

(Peak AM hour from 17:00 - 18:00)

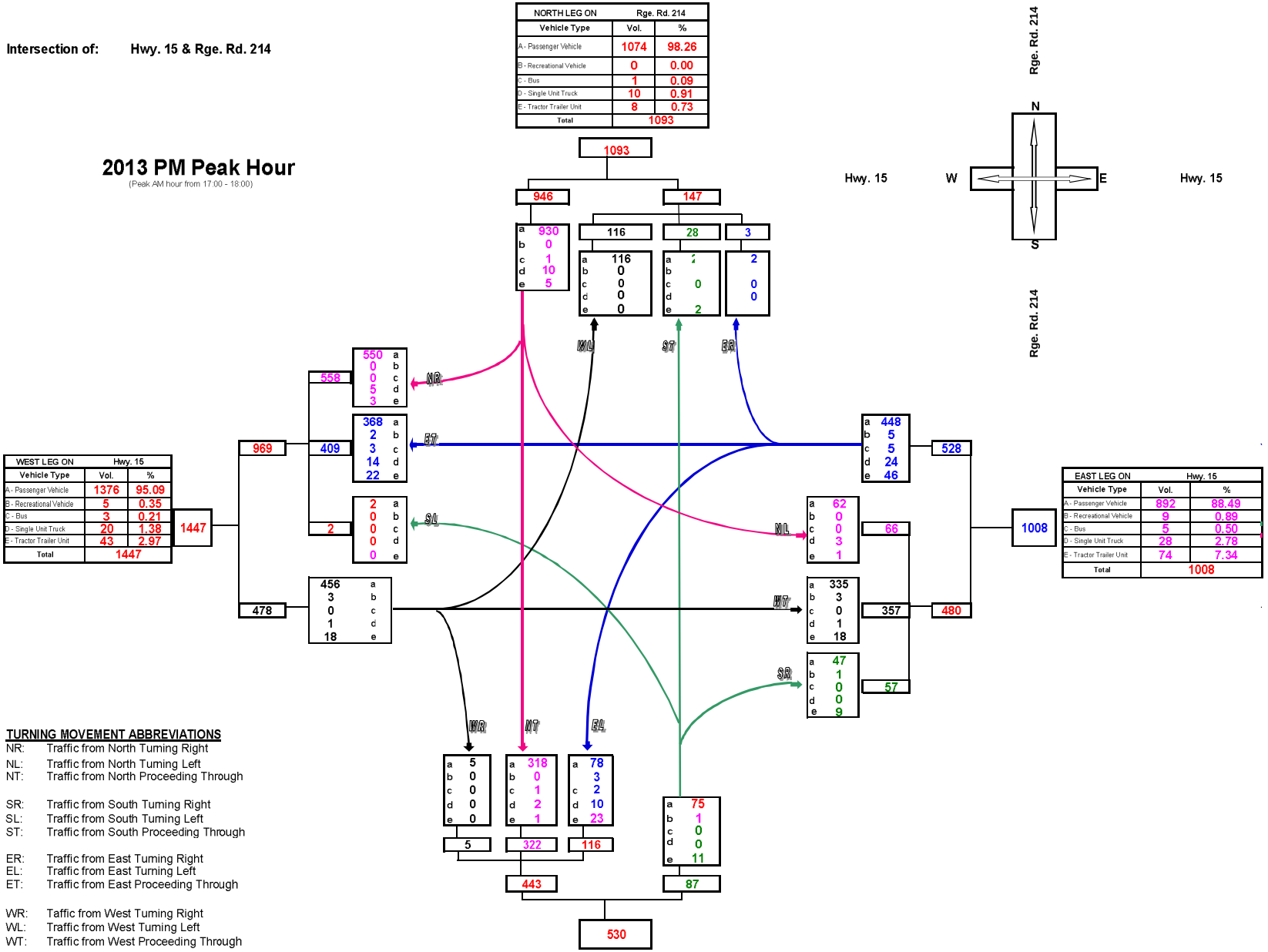

TURNING MOVEMENT ABBREVIATIONS

NR: Traffic from North Turning Right
NL: Traffic from North Turning Left
NT: Traffic from North Proceeding Through

SR: Traffic from South Turning Right
SL: Traffic from South Turning Left
ST: Traffic from South Proceeding Through

ER: Traffic from East Turning Right
EL: Traffic from East Turning Left
ET: Traffic from East Proceeding Through

WR: Taffic from West Turning Right
WL: Traffic from West Turning Left
WT: Traffic from West Proceeding Through

AADT: Average Annual Daily Traffic
Average daily traffic expressed as vehicles per day for period of January 1 to December 31 (365 days)

ASDT: Average Summer Daily Traffic
Average daily traffic expressed as vehilces per day for period of May 1 to September 30 (153 days)

Stewart Weir

APPENDIX H

Trip Generation, Directional Split, & Peak Hour Tables

SASOL TIA - Projected Development Traffic Generation (ADT)																				
Company (Average Daily Traffic)	2018				2023				2028				2033				2038			
	C	O	T	Total	C	O	T	Total	C	O	T	Total	C	O	T	Total	C	O	T	Total
Air Liquide		80		80		80		80		80		80		80		80		80		80
ATCO Energy		10		10		10	50	60		10		10		10		10		10		10
ATCO Power		46		46		46		46		46		46		46	120	166		46		46
Aux Sable	200	60	150	410		80		80	260	80	100	440				0		80	200	280
Dow Chemical				0				0			300	300				0				0
Keyara Energy		80		80		80		80		80		80		80		80		80		80
Sasol Canada Holding Ltd	2280			2280	2320	1670		3990		1850		1850		1850	800	2650		1850		1850
Shell Canada Ltd.				0				0				0				0				0
Tauras Industrial Park		50		50		80		80		80		80		80		80		80		80
Western Hydrogen Ltd.		20		20		20		20				0				0				0
Williams Energy Canada		128		128		128		128		128		128		128		128		128		128
Air Products		20		20		20	160	180		20		20		20		20		20		20
CP Rail		36		36		16		16		8		8		8		8		8		8
CN		8		8		8		8		8		8		8		8		8		8
Total Vehicles (ADT)	**2480**	**538**	**150**	**3168**	**2320**	**2238**	**210**	**4768**	**260**	**2390**	**400**	**3050**	**0**	**2310**	**920**	**3230**	**0**	**2390**	**200**	**2590**

C - Construction
O - Operation
T - Turnover

SASOL TIA - Projected Development Traffic Distribution by Percentage				
Company		Percent Distribution		
		Hwy 15:06 & Rge. Rd. 220	Hwy 15:06 & Rge.Rd. 214	Other
	Air Liquide	0%	100%	0%
	ATCO Energy	10%	70%	20%
	ATCO Power	0%	90%	10%
	Aux Sable	90%	0%	10%
	Dow Chemical	25%	0%	75%
	Keyara Energy	100%	0%	0%
	Sasol Canada Holdings Inc.	90%	10%	0%
	Shell Canada Ltd.	25%	70%	5%
	Tauras Industrial Park	30%	20%	50%
	Western Hydrogen Ltd.	100%	0%	0%
	Williams Energy Canada	85%	10%	5%
	Air Products	90%	10%	0%
	CP Rail	50%	40%	10%
	CN	20%	30%	50%

SASOL TIA - Projected Development Traffic Distribution (ADT) at Intersections

Company	2018			2023			2028			2033			2038		
	RR220	RR214	Other	RR220	RR214	Other	RR220	RR214	Other	RR220	RR214	Other	RR220	RR214	Other
Air Liquide															
Vehicles	0	80	0	0	80	0	0	80	0	0	80	0	0	80	0
ATCO Energy															
Vehicles	1	7	2	6	42	12	1	7	2	1	7	2	1	7	2
ATCO Power															
Vehicles	0	41	5	0	41	5	0	41	5	0	149	17	0	41	5
Aux Sable															
Vehicles	369	0	41	72	0	8	396	0	44	0	0	0	252	0	28
Dow Chemical															
Vehicles	0	0	0	0	0	0	75	0	225	0	0	0	0	0	0
Keyara Energy															
Vehicles	80	0	0	80	0	0	80	0	0	80	0	0	80	0	0
Sasol Canada Holdings Inc.															
Vehicles	2052	228	0	3591	399	0	1665	185	0	2385	265	0	1665	185	0
Shell Canada Ltd.															
Vehicles	0	0	0	0	0	0	0	0	0	0	0	0	0	0	0
Tauras Industrial Park															
Vehicles	15	10	25	24	16	40	24	16	40	24	16	40	24	16	40
Western Hydrogen Ltd.															
Vehicles	20	0	0	20	0	0	0	0	0	0	0	0	0	0	0
Williams Energy Canada															
Vehicles	109	13	6	109	13	6	109	13	6	109	13	6	109	13	6
Air Products															
Vehicles	18	2	0	162	18	0	18	2	0	18	2	0	18	2	0
CP Rail															
Vehicles	18	14	4	8	6	2	4	3	1	4	3	1	4	3	1
CN															
Vehicles	2	2	4	2	2	4	2	2	4	2	2	4	2	2	4
Total Vehicles (ADT)	**2683**	**398**	**87**	**4073**	**618**	**77**	**2373**	**350**	**327**	**2622**	**538**	**70**	**2154**	**350**	**86**

SASOL TIA - Projected Development Traffic Distribution at Intersections (AM Peak) = 25% of ADT

Company	2018			2023			2028			2033			2038		
	RR220	RR214	Other	RR220	RR214	Other	RR220	RR214	Other	RR220	RR214	Other	RR220	RR214	Other
Air Liquide															
Vehicles	0	20	0	0	20	0	0	20	0	0	20	0	0	20	0
ATCO Energy															
Vehicles	0	2	1	2	11	3	0	2	1	0	2	1	0	2	1
ATCO Power															
Vehicles	0	10	1	0	10	1	0	10	1	0	37	4	0	10	1
Aux Sable															
Vehicles	92	0	10	18	0	2	99	0	11	0	0	0	63	0	7
Dow Chemical															
Vehicles	0	0	0	0	0	0	19	0	56	0	0	0	0	0	0
Keyara Energy															
Vehicles	20	0	0	20	0	0	20	0	0	20	0	0	20	0	0
Sasol Canada Holdings Inc.															
Vehicles	513	57	0	898	100	0	416	46	0	596	66	0	416	46	0
Shell Canada Ltd.															
Vehicles	0	0	0	0	0	0	0	0	0	0	0	0	0	0	0
Tauras Industrial Park															
Vehicles	4	3	6	6	4	10	6	4	10	6	4	10	6	4	10
Western Hydrogen Ltd.															
Vehicles	5	0	0	5	0	0	0	0	0	0	0	0	0	0	0
Williams Energy Canada															
Vehicles	27	3	2	27	3	2	27	3	2	27	3	2	27	3	2
Air Products															
Vehicles	5	1	0	41	5	0	5	1	0	5	1	0	5	1	0
CP Rail															
Vehicles	5	4	1	2	2	0	1	1	0	1	1	0	1	1	0
CN															
Vehicles	0	1	1	0	1	1	0	1	1	0	1	1	0	1	1
Total Vehicles (AM)	**671**	**100**	**22**	**1018**	**135**	**19**	**593**	**87**	**82**	**656**	**134**	**17**	**539**	**87**	**21**

SASOL TIA - Projected Development Traffic Distribution at Intersections (PM Peak) = 25% of ADT

Company	2018			2023			2028			2033			2038		
	RR220	RR214	Other	RR220	RR214	Other	RR220	RR214	Other	RR220	RR214	Other	RR220	RR214	Other
Air Liquide															
Vehicles	0	20	0	0	20	0	0	20	0	0	20	0	0	20	0
ATCO Energy															
Vehicles	0	2	1	2	11	3	0	2	1	0	2	1	0	2	1
ATCO Power															
Vehicles	0	10	1	0	10	1	0	10	1	0	37	4	0	10	1
Aux Sable															
Vehicles	92	0	10	18	0	2	99	0	11	0	0	0	63	0	7
Dow Chemical															
Vehicles	0	0	0	0	0	0	19	0	56	0	0	0	0	0	0
Keyara Energy															
Vehicles	20	0	0	20	0	0	20	0	0	20	0	0	20	0	0
Sasol Canada Holdings Inc.															
Vehicles	513	57	0	898	100	0	416	46	0	596	66	0	416	46	0
Shell Canada Ltd.															
Vehicles	0	0	0	0	0	0	0	0	0	0	0	0	0	0	0
Tauras Industrial Park															
Vehicles	4	3	6	6	4	10	6	4	10	6	4	10	6	4	10
Western Hydrogen Ltd.															
Vehicles	5	0	0	5	0	0	0	0	0	0	0	0	0	0	0
Williams Energy Canada															
Vehicles	27	3	2	27	3	2	27	3	2	27	3	2	27	3	2
Air Products															
Vehicles	5	1	0	41	5	0	5	1	0	5	1	0	5	1	0
CP Rail															
Vehicles	5	4	1	2	2	0	1	1	0	1	1	0	1	1	0
CN															
Vehicles	0	1	1	0	1	1	0	1	1	0	1	1	0	1	1
Total Vehicles (AM)	**671**	**100**	**3491**	**1018**	**155**	**2237**	**593**	**87**	**1537**	**656**	**134**	**665**	**539**	**87**	**21**

SASOL TIA - Projected Development Traffic Distribution AM Peak In = 90% AM Peak Out = 10%
PM Peak In = 10% PM Peak Out = 90%

Company	2018								2023								2028								2033								2038							
	RR220				RR214				RR220				RR214				RR220				RR214				RR220				RR214				RR220				RR214			
	AM Peak		PM Peak		AM Peak		PM Peak		AM Peak		PM Peak		AM Peak		PM Peak		AM Peak		PM Peak		AM Peak		PM Peak		AM Peak		PM Peak		AM Peak		PM Peak		AM Peak		PM Peak		AM Peak		PM Peak	
	IN	OUT	IN	OUT	IN	OUT	IN	OUT	IN	OUT	IN	OUT	IN	OUT	IN	OUT	IN	OUT	IN	OUT	IN	OUT	IN	OUT	IN	OUT	IN	OUT	IN	OUT	IN	OUT	IN	OUT	IN	OUT	IN	OUT
Air Liquide																																								
Vehicles	0	0	0	0	18	2	2	18	0	0	0	0	18	2	2	18	0	0	0	0	18	2	2	18	0	0	0	0	18	2	2	18	0	0	0	0	18	2	2	18
ATCO Energy																																								
Vehicles	0	0	0	0	2	0	0	2	1	0	0	1	9	1	1	9	0	0	0	0	2	0	0	2	0	0	0	0	2	0	0	2	0	0	0	0	2	0	0	2
ATCO Power																																								
Vehicles	0	0	0	0	9	1	1	9	0	0	0	0	9	1	1	9	0	0	0	0	9	1	1	9	0	0	0	0	34	4	4	34	0	0	0	0	9	1	1	9
Aux Sable																																								
Vehicles	83	9	9	83	0	0	0	0	16	2	2	16	0	0	0	0	89	10	10	89	0	0	0	0	0	0	0	0	0	0	0	0	57	6	6	57	0	0	0	0
Dow Chemical																																								
Vehicles	0	0	0	0	0	0	0	0	0	0	0	0	0	0	0	0	17	2	2	17	0	0	0	0	0	0	0	0	0	0	0	0	0	0	0	0	0	0	0	0
Keyera Energy																																								
Vehicles	18	2	2	18	0	0	0	0	18	2	2	18	0	0	0	0	18	2	2	18	0	0	0	0	18	2	2	18	0	0	0	0	18	2	2	18	0	0	0	0
Sasol Canada Holdings Inc.																																								
Vehicles	462	51	51	462	51	6	6	51	808	90	90	808	90	10	10	90	375	42	42	375	42	5	5	42	537	60	60	537	60	7	7	60	375	42	42	375	42	5	5	42
Shell Canada Ltd.																																								
Vehicles	0	0	0	0	0	0	0	0	0	0	0	0	0	0	0	0	0	0	0	0	0	0	0	0	0	0	0	0	0	0	0	0	0	0	0	0	0	0	0	0
Taurus Industrial Park																																								
Vehicles	3	0	0	3	2	0	0	2	5	1	1	5	4	0	0	4	5	1	1	5	4	0	0	4	5	1	1	5	4	0	0	4	5	1	1	5	4	0	0	4
Western Hydrogen Ltd.																																								
Vehicles	5	1	1	5	0	0	0	0	5	1	1	5	0	0	0	0	0	0	0	0	0	0	0	0	0	0	0	0	0	0	0	0	0	0	0	0	0	0	0	0
Williams Energy Canada																																								
Vehicles	24	3	3	24	3	0	0	3	24	3	3	24	3	0	0	3	24	3	3	24	3	0	0	3	24	3	3	24	3	0	0	3	24	3	3	24	3	0	0	3
Air Products																																								
Vehicles	4	0	0	4	0	0	0	0	36	4	4	36	4	0	0	4	4	0	0	4	0	0	0	0	4	0	0	4	0	0	0	0	4	0	0	4	0	0	0	0
CP Rail																																								
Vehicles	4	0	0	4	3	0	0	3	2	0	0	2	1	0	0	1	1	0	0	1	1	0	0	1	1	0	0	1	1	0	0	1	1	0	0	1	1	0	0	1
TBD																																								
Vehicles	0	0	0	0	1	0	0	1	0	0	0	0	1	0	0	1	0	0	0	0	1	0	0	1	0	0	0	0	1	0	0	1	0	0	0	0	1	0	0	1
Total Vehicles (AM &PM)	604	67	67	604	90	10	10	90	917	102	102	917	139	15	15	139	534	59	59	534	79	9	9	79	590	66	66	590	121	13	13	121	485	54	54	485	79	9	9	79

APPENDIX I

Existing, Background, and Combined Tables & Diagrams

OPUS STEWART WEIR

PROJECTED TRAFFIC

Background Traffic

Growth Rate	0.0%

AM Peak Hwy 15:06 & RR 220

Horizon	Year	Eastbound			Westbound			Northbound			Southbound			Total Traffic	No. of Yrs.
		Left	Thru	Right	Left	Thru	Right	Left	Thru	Right	Left	Thru	Right		
Base Year	2013	276	678	0	0	83	6	0	6	0	3	1	9	1062	0
5 years	2018	276	678	0	0	83	6	0	6	0	3	1	9	1062	5
10 Years	2023	276	678	0	0	83	6	0	6	0	3	1	9	1062	10
15 Years	2028	276	678	0	0	83	6	0	6	0	3	1	9	1062	15
20 Years	2033	276	678	0	0	83	6	0	6	0	3	1	9	1062	20
25 Years	2038	276	678	0	0	83	6	0	6	0	3	1	9	1062	25

PM Peak Hwy 15 & RR 220

Horizon	Year	Eastbound			Westbound			Northbound			Southbound			Total Traffic	No. of Yrs.
		Left	Thru	Right	Left	Thru	Right	Left	Thru	Right	Left	Thru	Right		
Base Year	2013	27	116	0	0	558	1	0	2	0	5	6	208	923	0
5 years	2018	27	116	0	0	558	1	0	2	0	5	6	208	923	5
10 Years	2023	27	116	0	0	558	1	0	2	0	5	6	208	923	10
15 Years	2028	27	116	0	0	558	1	0	2	0	5	6	208	923	15
20 Years	2033	27	116	0	0	558	1	0	2	0	5	6	208	923	20
25 Years	2038	27	116	0	0	558	1	0	2	0	5	6	208	923	25

OPUS STEWART WEIR

PROJECTED TRAFFIC

Background Traffic

Growth Rate	2.0%

AM Peak Hwy 15:06 & RR 220

Horizon	Year	Eastbound			Westbound			Northbound			Southbound			Total Traffic	No. of Yrs.
		Left	Thru	Right	Left	Thru	Right	Left	Thru	Right	Left	Thru	Right		
Base Year	2013	0	306	1	1	250	0	1	0	1	0	0	0	560	0
5 years	2018	0	337	1	1	275	0	1	0	1	0	0	0	616	5
10 Years	2023	0	367	1	1	300	0	1	0	1	0	0	0	672	10
15 Years	2028	0	398	1	1	325	0	1	0	1	0	0	0	728	15
20 Years	2033	0	428	1	1	350	0	1	0	1	0	0	0	784	20
25 Years	2038	0	459	2	2	375	0	2	0	2	0	0	0	840	25

PM Peak Hwy 15 & RR 220

Horizon	Year	Eastbound			Westbound			Northbound			Southbound			Total Traffic	No. of Yrs.
		Left	Thru	Right	Left	Thru	Right	Left	Thru	Right	Left	Thru	Right		
Base Year	2013	0	366	1	1	506	0	2	0	1	0	0	0	877	0
5 years	2018	0	403	1	1	557	0	2	0	1	0	0	0	965	5
10 Years	2023	0	439	1	1	607	0	2	0	1	0	0	0	1052	10
15 Years	2028	0	476	1	1	658	0	3	0	1	0	0	0	1140	15
20 Years	2033	0	512	1	1	708	0	3	0	1	0	0	0	1228	20
25 Years	2038	0	549	2	2	759	0	3	0	2	0	0	0	1316	25

OPUS STEWART WEIR

PROJECTED TRAFFIC

Modified Background Traffic

Growth Rate	2.0%

AM Peak Hwy 15:06 & RR 220

Horizon	Year	Eastbound			Westbound			Northbound			Southbound			Total Traffic	No. of Yrs.
		Left	Thru	Right	Left	Thru	Right	Left	Thru	Right	Left	Thru	Right		
Base Year	2013	276	984	1	1	333	6	1	6	1	3	1	9	1622	0
5 years	2018	276	1015	1	1	358	6	1	6	1	3	1	9	1678	5
10 Years	2023	276	1045	1	1	383	6	1	6	1	3	1	9	1734	10
15 Years	2028	276	1076	1	1	408	6	1	6	1	3	1	9	1790	15
20 Years	2033	276	1106	1	1	433	6	1	6	1	3	1	9	1846	20
25 Years	2038	276	1137	2	2	458	6	2	6	2	3	1	9	1902	25

PM Peak Hwy 15 & RR 220

Horizon	Year	Eastbound			Westbound			Northbound			Southbound			Total Traffic	No. of Yrs.
		Left	Thru	Right	Left	Thru	Right	Left	Thru	Right	Left	Thru	Right		
Base Year	2013	27	482	1	1	1064	1	2	2	1	5	6	208	1800	0
5 years	2018	27	519	1	1	1115	1	2	2	1	5	6	208	1888	5
10 Years	2023	27	555	1	1	1165	1	2	2	1	5	6	208	1975	10
15 Years	2028	27	592	1	1	1216	1	3	2	1	5	6	208	2063	15
20 Years	2033	27	628	1	1	1266	1	3	2	1	5	6	208	2151	20
25 Years	2038	27	665	2	2	1317	1	3	2	2	5	6	208	2239	25

OPUS STEWART WEIR

PROJECTED TRAFFIC

Background Traffic

Growth Rate	0.0%

AM Peak Hwy 15 & RR 214

Horizon	Year	Eastbound			Westbound			Northbound			Southbound			Total Traffic	No. of Yrs.
		Left	Thru	Right	Left	Thru	Right	Left	Thru	Right	Left	Thru	Right		
Base Year	2013	678	5	0	0	0	59	0	292	0	9	16	63	1122	0
5 years	2018	678	5	0	0	0	59	0	292	0	9	16	83	1142	5
10 Years	2023	678	5	0	0	0	59	0	292	0	9	16	83	1142	10
15 Years	2028	678	5	0	0	0	59	0	292	0	9	16	83	1142	15
20 Years	2033	678	5	0	0	0	59	0	292	0	9	16	83	1142	20
25 Years	2038	678	5	0	0	0	59	0	292	0	9	16	83	1142	25

PM Peak Hwy 15 & RR 214

Horizon	Year	Eastbound			Westbound			Northbound			Southbound			Total Traffic	No. of Yrs.
		Left	Thru	Right	Left	Thru	Right	Left	Thru	Right	Left	Thru	Right		
Base Year	2013	116	0	0	0	0	3	0	28	0	66	322	558	1093	0
5 years	2018	116	0	0	0	0	3	0	28	0	66	322	558	1093	5
10 Years	2023	116	0	0	0	0	3	0	28	0	66	322	558	1093	10
15 Years	2028	116	0	0	0	0	3	0	28	0	66	322	558	1093	15
20 Years	2033	116	0	0	0	0	3	0	28	0	66	322	558	1093	20
25 Years	2038	116	0	0	0	0	3	0	28	0	66	322	558	1093	25

OPUS STEWART WEIR

PROJECTED TRAFFIC

Background Traffic

Growth Rate	2.0%

AM Peak Hwy 15 & RR 214

Horizon	Year	Eastbound			Westbound			Northbound			Southbound			Total Traffic	No. of Yrs.
		Left	Thru	Right	Left	Thru	Right	Left	Thru	Right	Left	Thru	Right		
Base Year	2013	0	306	1	41	243	0	1	0	63	0	0	0	655	0
5 years	2018	0	337	1	45	267	0	1	0	69	0	0	0	721	5
10 Years	2023	0	367	1	49	292	0	1	0	76	0	0	0	786	10
15 Years	2028	0	398	1	53	316	0	1	0	82	0	0	0	852	15
20 Years	2033	0	428	1	57	340	0	1	0	88	0	0	0	917	20
25 Years	2038	0	459	2	62	365	0	2	0	95	0	0	0	983	25

PM Peak Hwy 15 & RR 214

Horizon	Year	Eastbound			Westbound			Northbound			Southbound			Total Traffic	No. of Yrs.
		Left	Thru	Right	Left	Thru	Right	Left	Thru	Right	Left	Thru	Right		
Base Year	2013	0	357	5	116	409	0	2	0	57	0	0	0	946	0
5 years	2018	0	393	6	128	450	0	2	0	63	0	0	0	1041	5
10 Years	2023	0	428	6	139	491	0	2	0	68	0	0	0	1135	10
15 Years	2028	0	464	7	151	532	0	3	0	74	0	0	0	1230	15
20 Years	2033	0	500	7	162	573	0	3	0	80	0	0	0	1324	20
25 Years	2038	0	536	8	174	614	0	3	0	86	0	0	0	1419	25

OPUS STEWART WEIR

PROJECTED TRAFFIC

Modified Background Traffic

Growth Rate	2.0%

AM Peak Hwy 15 & RR 214

Horizon	Year	Eastbound			Westbound			Northbound			Southbound			Total Traffic	No. of Yrs.
		Left	Thru	Right	Left	Thru	Right	Left	Thru	Right	Left	Thru	Right		
Base Year	2013	678	311	1	41	243	59	1	292	63	9	16	63	1777	0
5 years	2018	678	342	1	45	267	59	1	292	69	9	16	83	1863	5
10 Years	2023	678	372	1	49	292	59	1	292	76	9	16	83	1928	10
15 Years	2028	678	403	1	53	316	59	1	292	82	9	16	83	1994	15
20 Years	2033	678	433	1	57	340	59	1	292	88	9	16	83	2059	20
25 Years	2038	678	464	2	62	365	59	2	292	95	9	16	83	2125	25

PM Peak Hwy 15 & RR 214

Horizon	Year	Eastbound			Westbound			Northbound			Southbound			Total Traffic	No. of Yrs.
		Left	Thru	Right	Left	Thru	Right	Left	Thru	Right	Left	Thru	Right		
Base Year	2013	116	357	5	116	409	3	2	28	57	66	322	558	2039	0
5 years	2018	116	393	6	128	450	3	2	28	63	66	322	558	2134	5
10 Years	2023	116	428	6	139	491	3	2	28	68	66	322	558	2228	10
15 Years	2028	116	464	7	151	532	3	3	28	74	66	322	558	2323	15
20 Years	2033	116	500	7	162	573	3	3	28	80	66	322	558	2417	20
25 Years	2038	116	536	8	174	614	3	3	28	86	66	322	558	2512	25

OPUS STEWART WEIR

PROJECTED TRAFFIC

Site Generated Traffic

AM Peak Hwy 15 & RR 220

Horizon	Year	Eastbound			Westbound			Northbound			Southbound			Total Traffic	No. of Yrs.
		Left	Thru	Right	Left	Thru	Right	Left	Thru	Right	Left	Thru	Right		
Base Year	2013	0	0	0	0	0	0	0	0	0	0	0	0	0	0
5 years	2018	483	0	0	0	0	115	0	6	0	12	1	54	671	5
10 Years	2023	734	0	0	0	0	174	0	9	0	19	1	82	1019	10
15 Years	2028	427	0	0	0	0	122	0	6	0	13	1	57	626	15
20 Years	2033	472	0	0	0	0	112	0	6	0	9	1	38	638	20
25 Years	2038	388	0	0	0	0	92	0	5	0	10	1	43	539	25

PM Peak Hwy 15 & RR 220

Horizon	Year	Eastbound			Westbound			Northbound			Southbound			Total Traffic	No. of Yrs.
		Left	Thru	Right	Left	Thru	Right	Left	Thru	Right	Left	Thru	Right		
Existing	2013	0	0	0	0	0	0	0	0	0	0	0	0	0	0
5 years	2018	54	0	0	0	0	12	0	1	0	115	6	483	671	5
10 Years	2023	82	0	0	0	0	19	0	1	0	174	9	734	1019	10
15 Years	2028	47	0	0	0	0	11	0	1	0	122	6	515	702	15
20 Years	2033	53	0	0	0	0	12	0	1	0	80	5	343	494	20
25 Years	2038	43	0	0	0	0	10	0	1	0	92	5	388	539	25

OPUS STEWART WEIR

PROJECTED TRAFFIC

Site Generated Traffic

AM Peak Hwy 15 & RR 214

Horizon	Year	Eastbound			Westbound			Northbound			Southbound			Total Traffic	No. of Yrs.
		Left	Thru	Right	Left	Thru	Right	Left	Thru	Right	Left	Thru	Right		
Base Year	2013	0	0	0	0	0	0	0	0	0	0	0	0	0	0
5 years	2018	63	0	0	0	0	4	0	23	0	1	2	7	100	5
10 Years	2023	97	0	0	0	0	7	0	35	0	1	3	11	154	10
15 Years	2028	55	0	0	0	0	4	0	20	0	1	2	8	90	15
20 Years	2033	85	0	0	0	0	6	0	30	0	1	2	8	132	20
25 Years	2038	55	0	0	0	0	5	0	25	0	1	2	8	96	25

PM Peak Hwy 15 & RR 214

Horizon	Year	Eastbound			Westbound			Northbound			Southbound			Total Traffic	No. of Yrs.
		Left	Thru	Right	Left	Thru	Right	Left	Thru	Right	Left	Thru	Right		
Base Year	2013	0	0	0	0	0	0	0	0	0	0	0	0	0	0
5 years	2018	7	0	0	0	0	1	0	2	0	4	23	63	100	5
10 Years	2023	11	0	0	0	0	1	0	3	0	7	35	97	154	10
15 Years	2028	6	0	0	0	0	1	0	2	0	5	24	68	106	15
20 Years	2033	9	0	0	0	0	1	0	2	0	5	25	72	114	20
25 Years	2038	7	0	0	0	0	1	0	3	0	4	20	55	90	25

OPUS STEWART WEIR

PROJECTED TRAFFIC

Combined Traffic

AM Peak Hwy 15 & RR 220

Horizon	Year	Eastbound			Westbound			Northbound			Southbound			Total Traffic	No. of Yrs.
		Left	Thru	Right	Left	Thru	Right	Left	Thru	Right	Left	Thru	Right		
Base Year	2013	276	984	1	1	333	6	1	6	1	3	1	9	1622	0
5 years	2018	759	1015	1	1	358	121	1	12	1	15	2	63	2349	5
10 Years	2023	1010	1045	1	1	383	180	1	15	1	22	2	91	2753	10
15 Years	2028	703	1076	1	1	408	128	1	12	1	16	2	66	2416	15
20 Years	2033	748	1106	1	1	433	118	1	12	1	12	2	47	2484	20
25 Years	2038	664	1137	2	2	458	98	2	11	2	13	2	52	2441	25

PM Peak Hwy 15 & RR 220

Horizon	Year	Eastbound			Westbound			Northbound			Southbound			Total Traffic	No. of Yrs.
		Left	Thru	Right	Left	Thru	Right	Left	Thru	Right	Left	Thru	Right		
Base Year	2013	27	482	1	1	1064	1	2	2	1	5	6	208	1800	0
5 years	2018	81	519	1	1	1115	13	2	3	1	120	12	691	2559	5
10 Years	2023	109	555	1	1	1165	20	2	3	1	179	15	942	2994	10
15 Years	2028	74	592	1	1	1216	12	3	3	1	127	12	723	2765	15
20 Years	2033	80	628	1	1	1266	13	3	3	1	85	11	551	2645	20
25 Years	2038	70	665	2	2	1317	11	3	3	2	97	11	596	2778	25

OPUS STEWART WEIR

PROJECTED TRAFFIC

Combined Traffic

AM Peak Hwy 15 & RR 214

Horizon	Year	Eastbound			Westbound			Northbound			Southbound			Total Traffic	No. of Yrs.
		Left	Thru	Right	Left	Thru	Right	Left	Thru	Right	Left	Thru	Right		
Base Year	2013	678	311	1	41	243	59	1	292	63	9	16	63	1777	0
5 years	2018	741	342	1	45	267	63	1	315	69	10	18	90	1963	5
10 Years	2023	775	372	1	49	292	66	1	327	76	10	19	94	2082	10
15 Years	2028	733	403	1	53	316	63	1	312	82	10	18	91	2084	15
20 Years	2033	763	433	1	57	340	65	1	322	88	10	18	91	2191	20
25 Years	2038	733	464	2	62	365	64	2	317	95	10	18	91	2221	25

PM Peak Hwy 15 & RR 214

Horizon	Year	Eastbound			Westbound			Northbound			Southbound			Total Traffic	No. of Yrs.
		Left	Thru	Right	Left	Thru	Right	Left	Thru	Right	Left	Thru	Right		
Base Year	2013	116	357	5	116	409	3	2	28	57	66	322	558	2039	0
5 years	2018	123	393	6	128	450	4	2	30	63	70	345	621	2234	5
10 Years	2023	127	428	6	139	491	4	2	31	68	73	357	655	2382	10
15 Years	2028	122	464	7	151	532	4	3	30	74	71	346	626	2429	15
20 Years	2033	125	500	7	162	573	4	3	30	80	71	347	630	2531	20
25 Years	2038	123	536	8	174	614	4	3	31	86	70	342	613	2602	25

OPUS STEWART WEIR

Background Traffic (AM PEAK)

Linear Growth Rate = 0%

2013 Existing (Base Year)

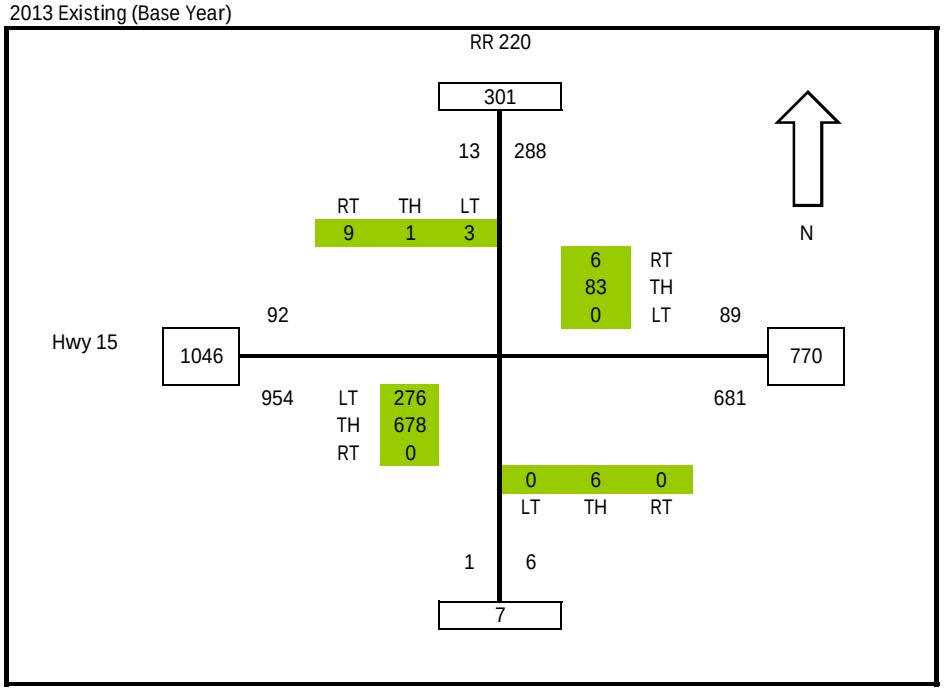

2018 Estimated (5 years Horizon)

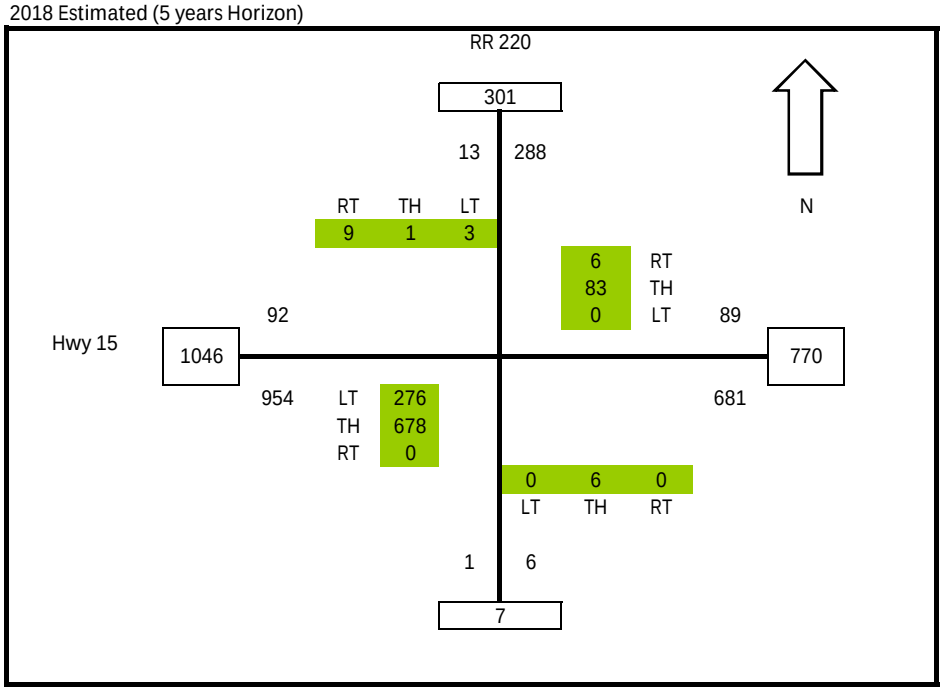

OPUS STEWART WEIR

Background Traffic (AM PEAK)

Linear Growth Rate = 0%

2023 Estimated (10 Year Horizon)

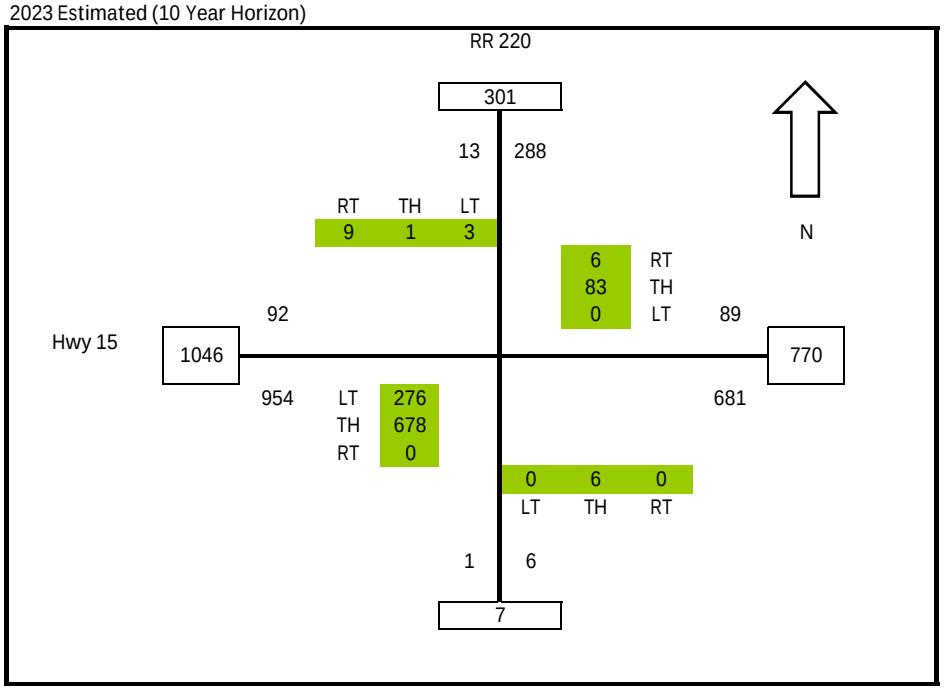

2028 Estimated (15 Year Horizon)

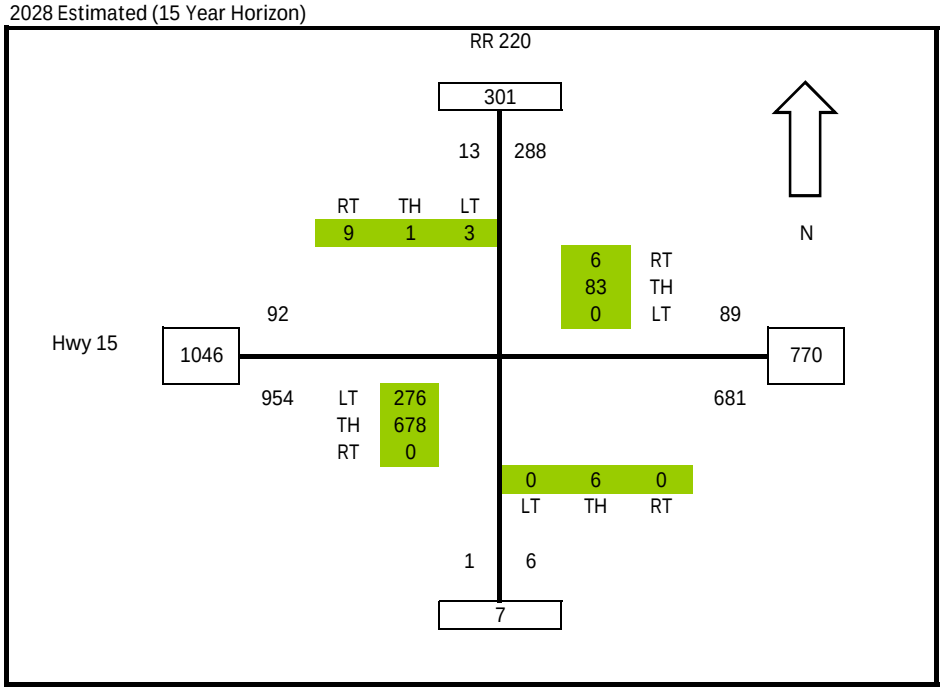

OPUS STEWART WEIR

Background Traffic (AM PEAK)

Linear Growth Rate = 0%

2033 Estimated (20 Year Horizon)

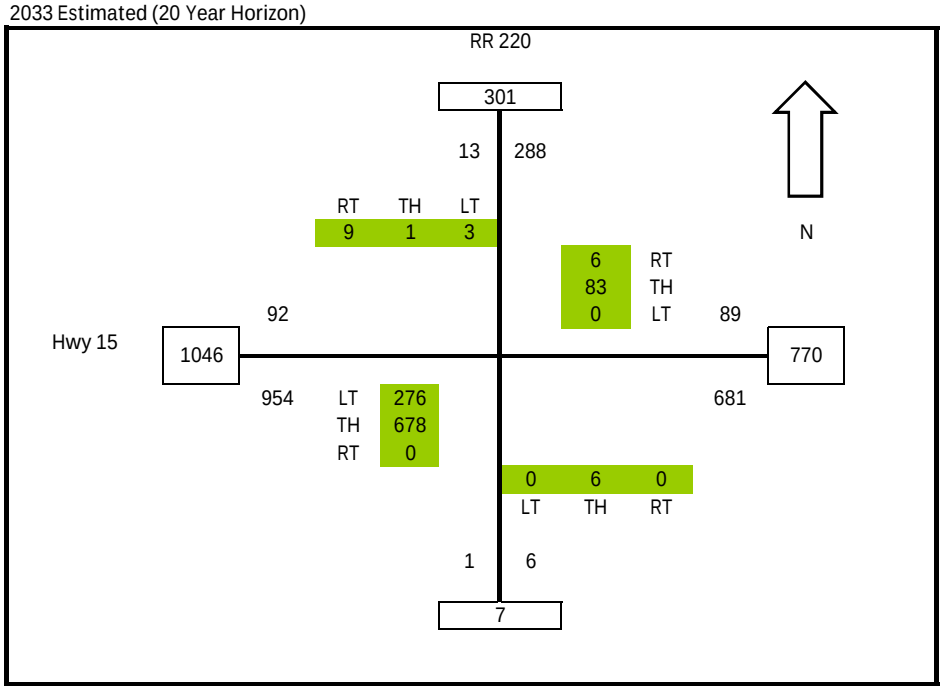

2038 Estimated (25 Year Horizon)

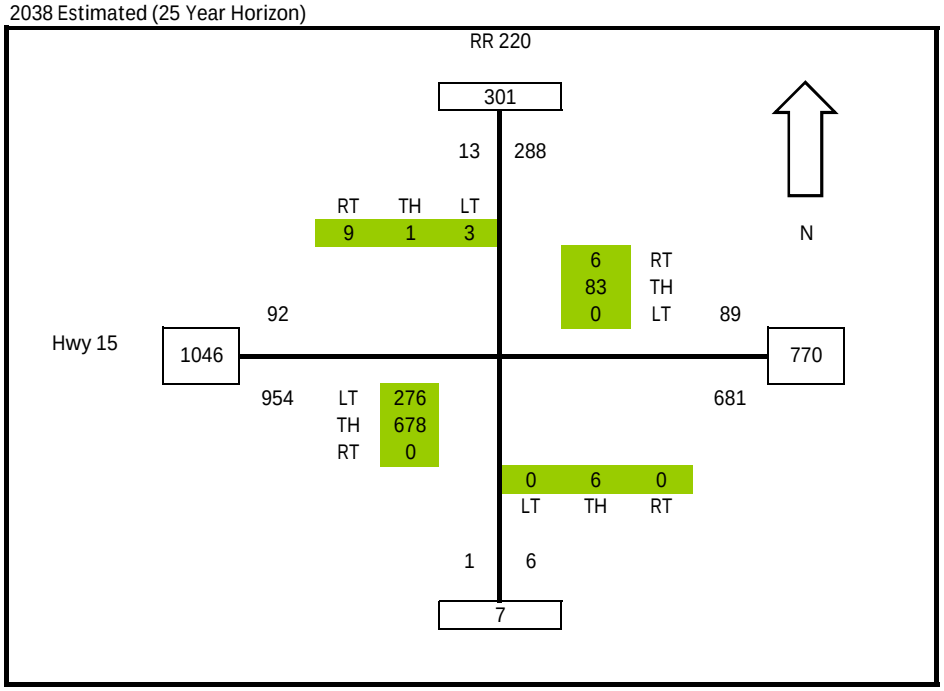

OPUS STEWART WEIR

Background Traffic (AM PEAK)

Linear Growth Rate = 2%

2013 Existing (Base Year)

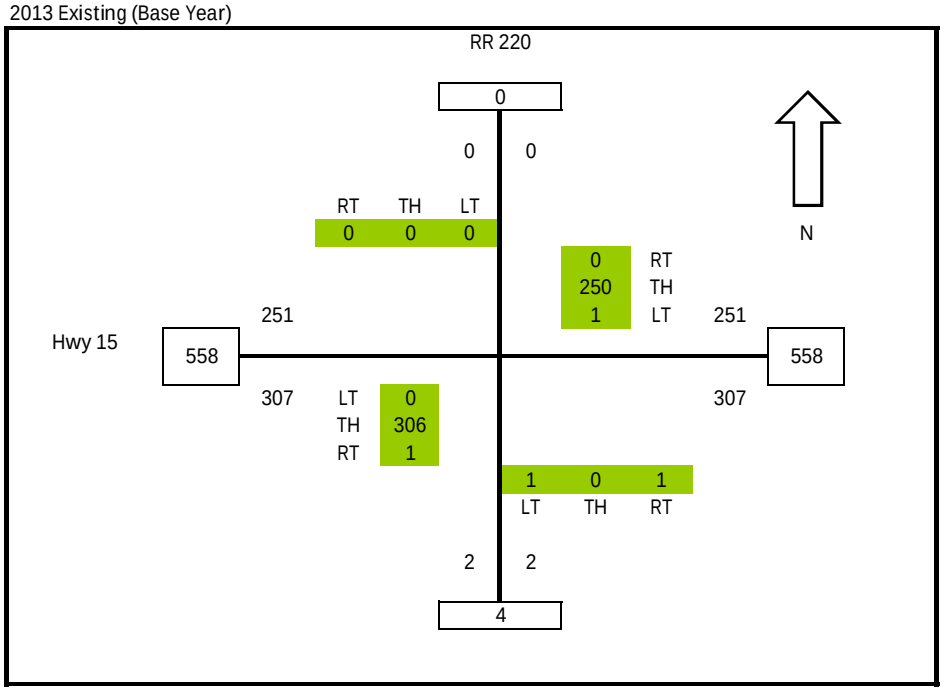

2018 Estimated (5 years Horizon)

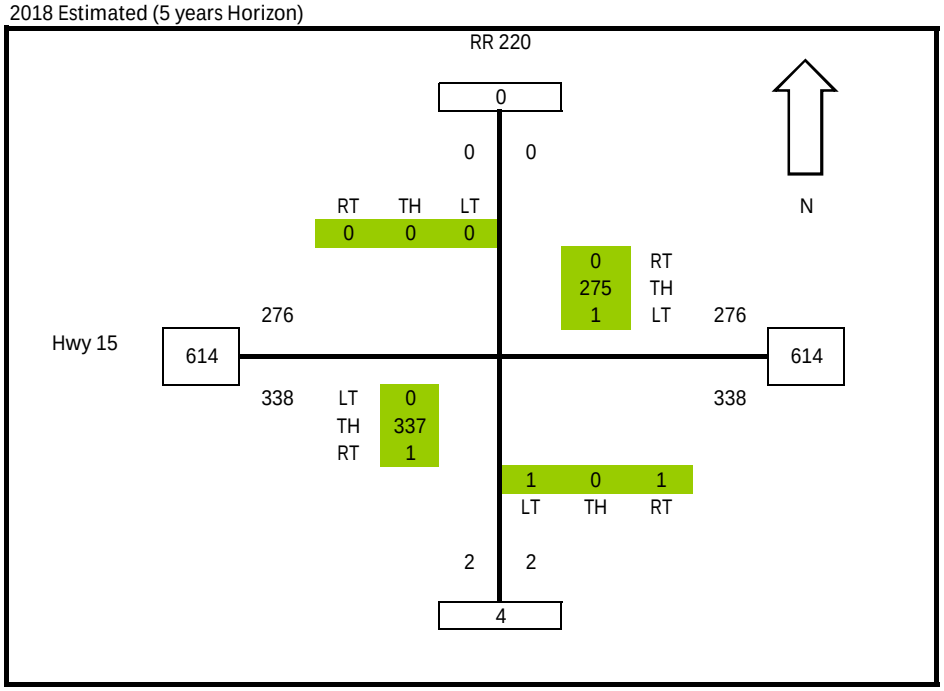

OPUS STEWART WEIR

Background Traffic (AM PEAK)

Linear Growth Rate = 2%

2023 Estimated (10 Year Horizon)

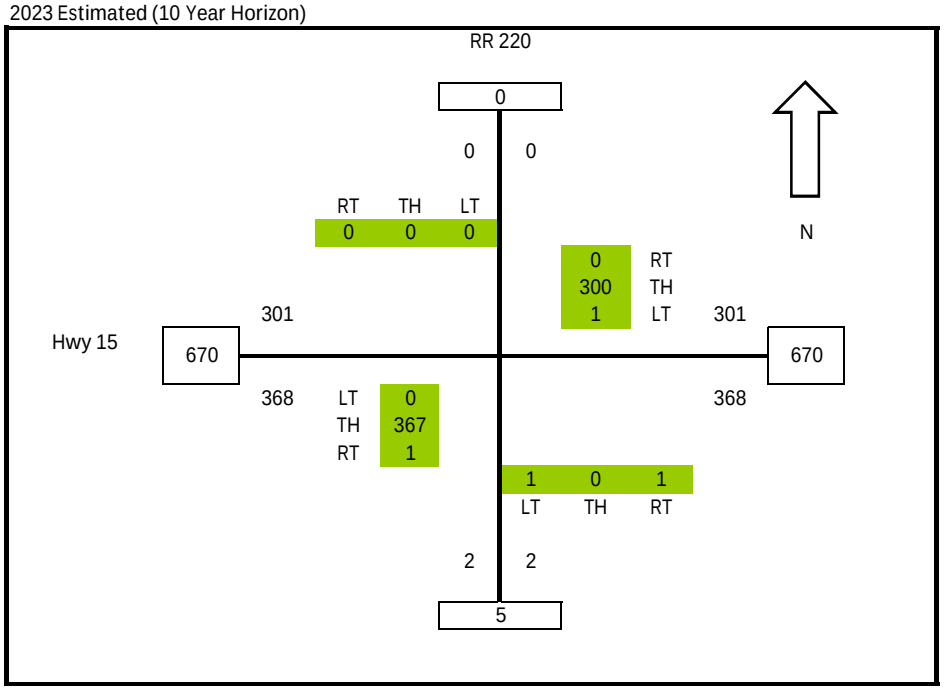

2028 Estimated (15 Year Horizon)

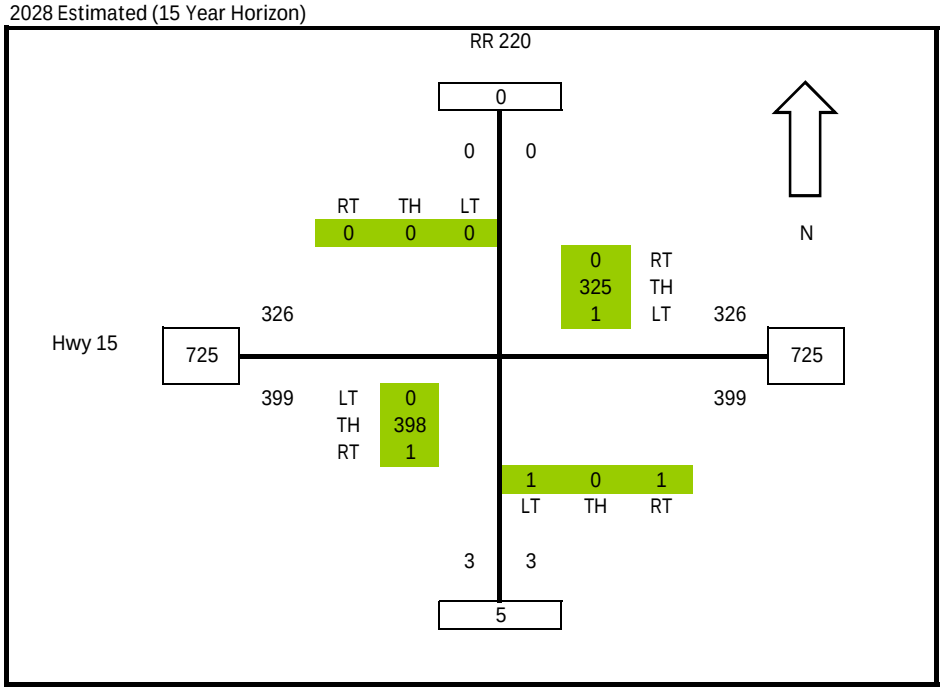

OPUS STEWART WEIR

Background Traffic (AM PEAK)

Linear Growth Rate = 2%

2033 Estimated (20 Year Horizon)

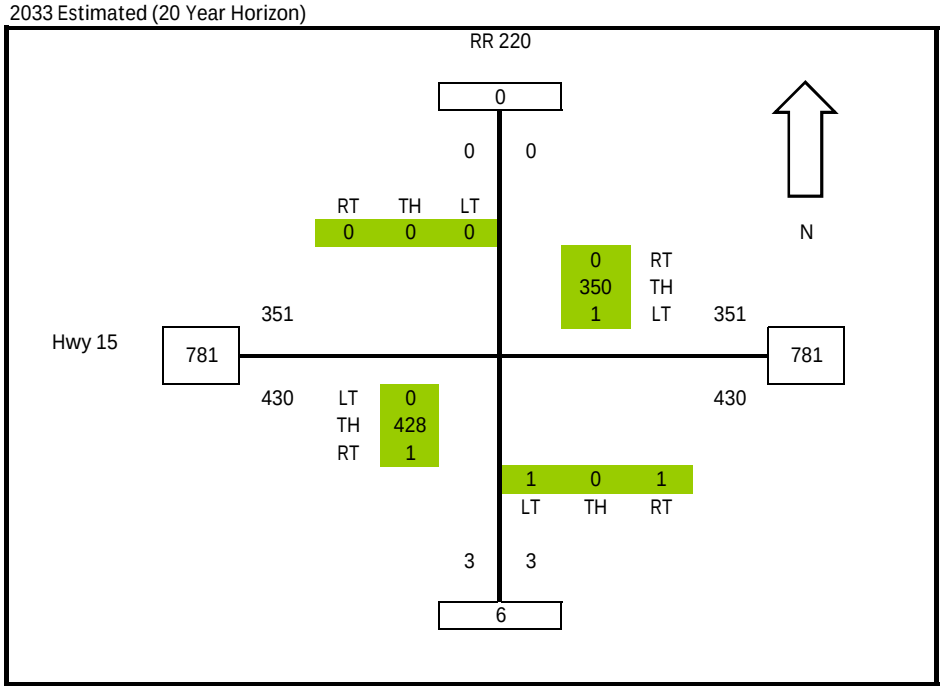

2038 Estimated (25 Year Horizon)

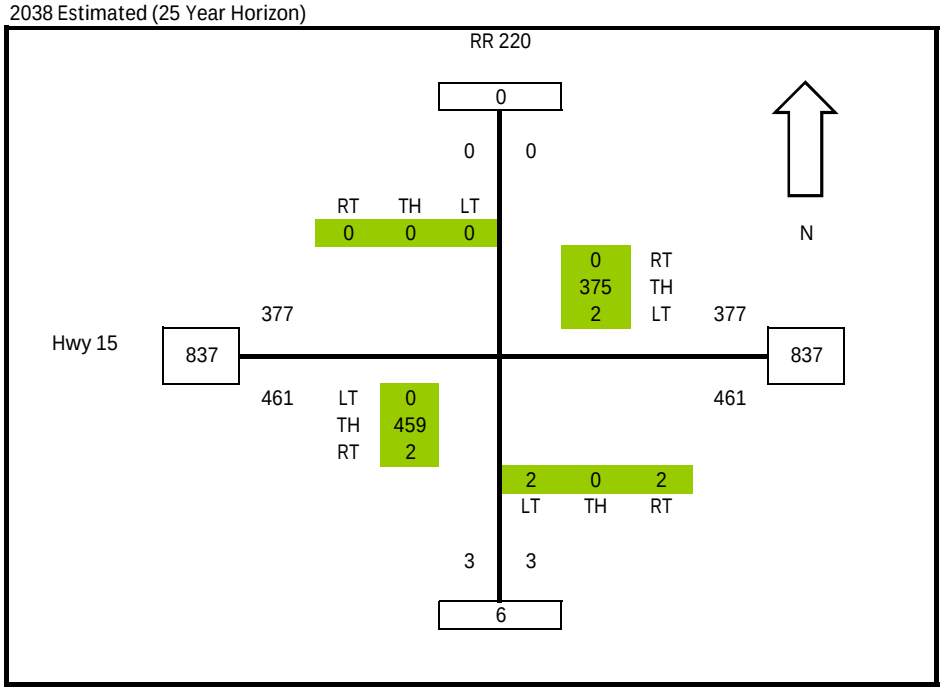

OPUS STEWART WEIR

Modified Background Traffic (AM PEAK)

Linear Growth Rate = 2%

2013 Existing (Base Year)

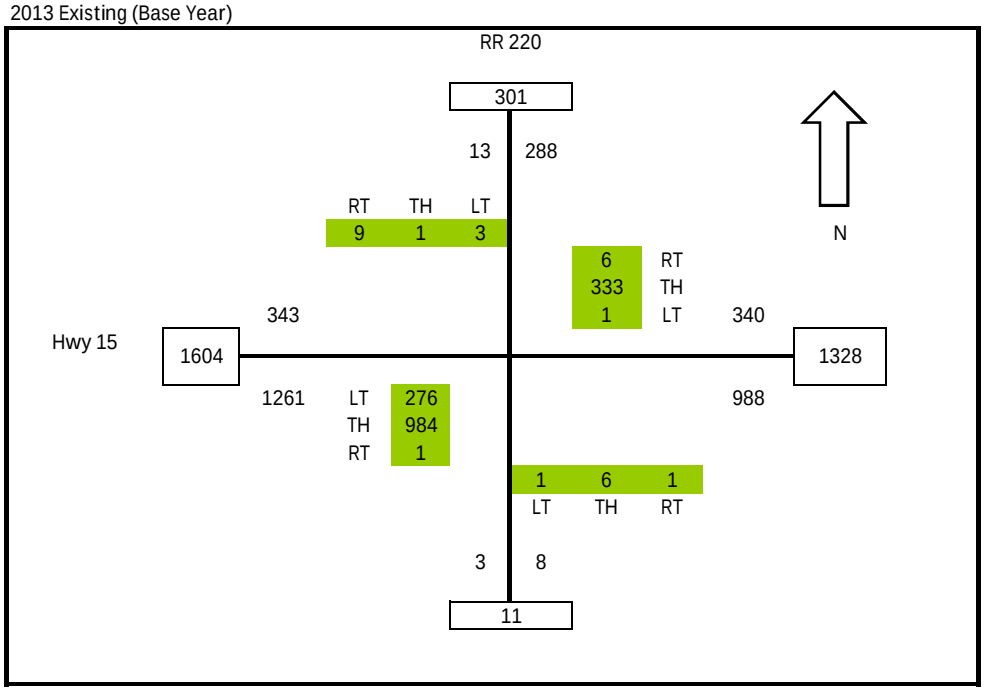

2018 Estimated (5 years Horizon)

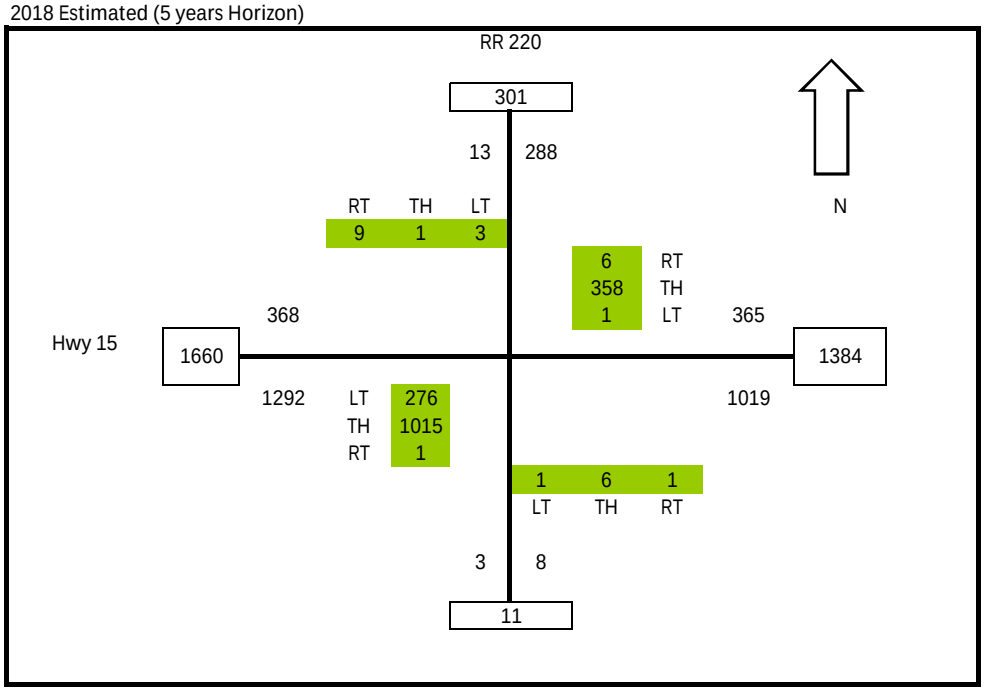

OPUS STEWART WEIR

Modified Background Traffic (AM PEAK)

Linear Growth Rate = 2%

2023 Estimated (10 Year Horizon)

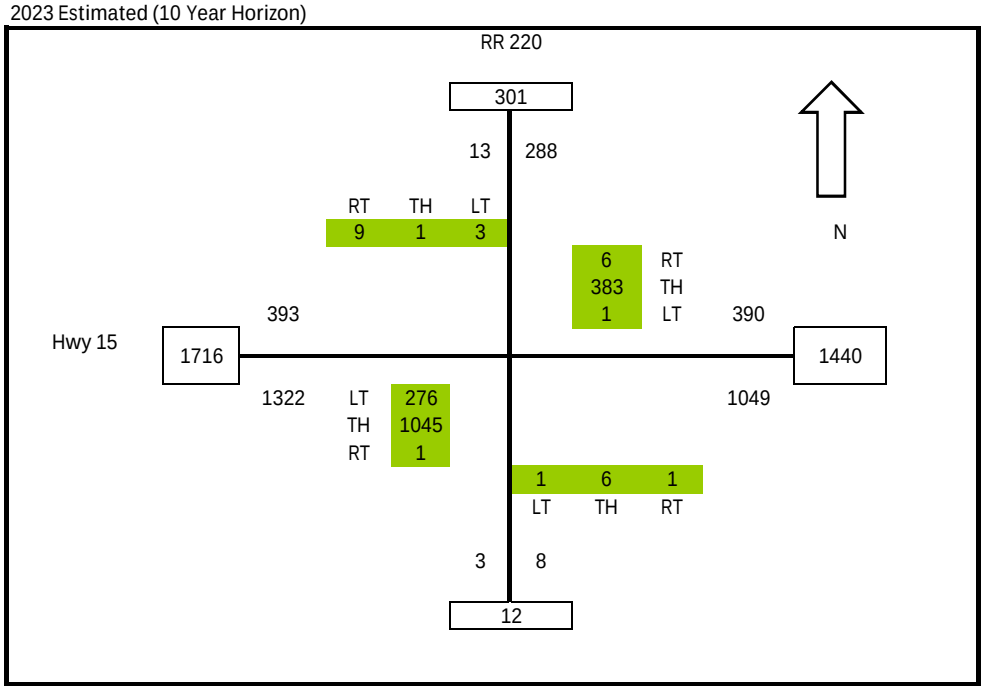

2028 Estimated (15 Year Horizon)

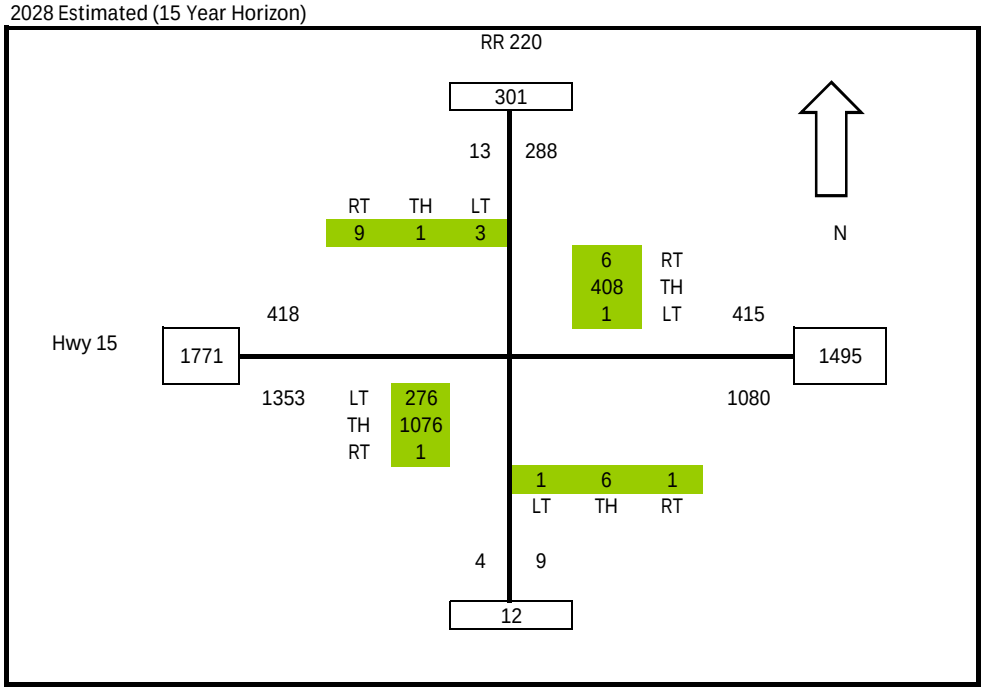

OPUS STEWART WEIR

Modified Background Traffic (AM PEAK)

Linear Growth Rate = 2%

2033 Estimated (20 Year Horizon)

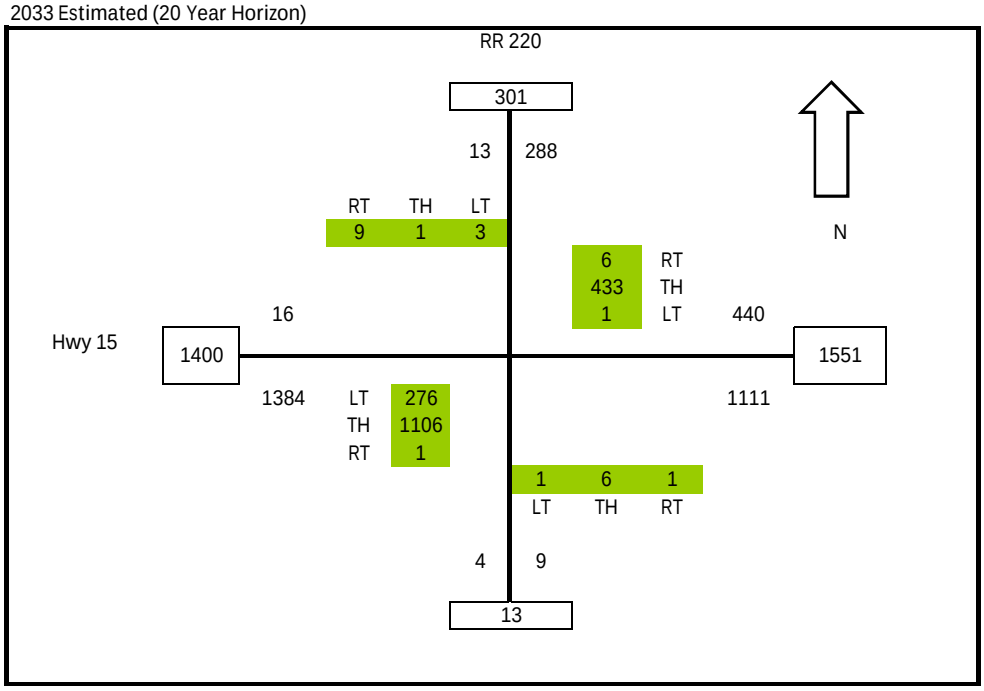

2038 Estimated (25 Year Horizon)

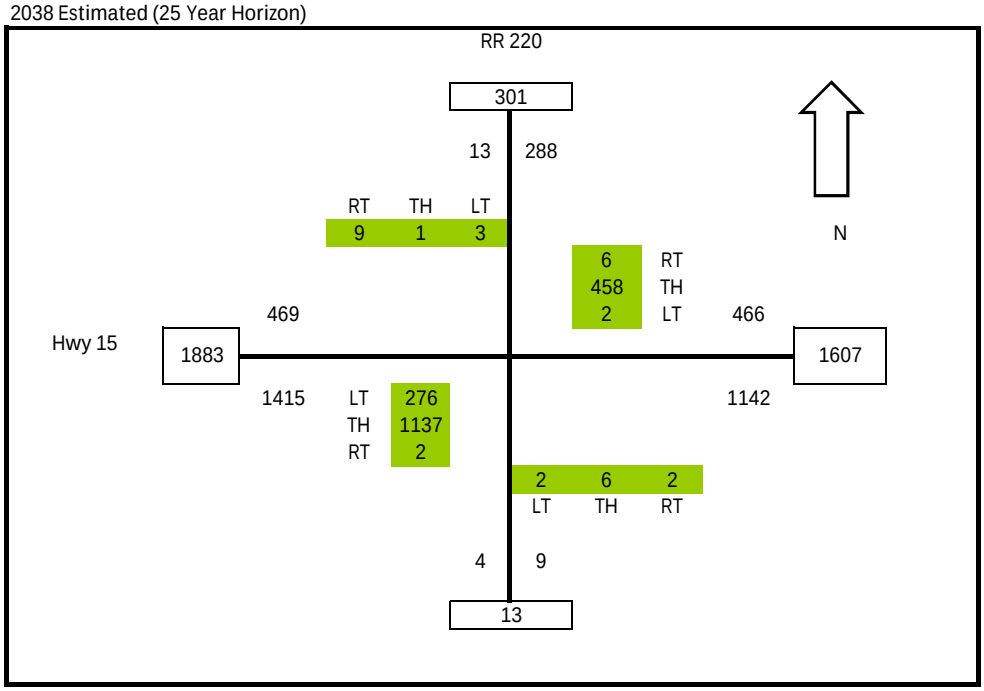

OPUS STEWART WEIR

Background Traffic (PM PEAK)

Linear Growth Rate = 0%

2013 Existing (Base Year)

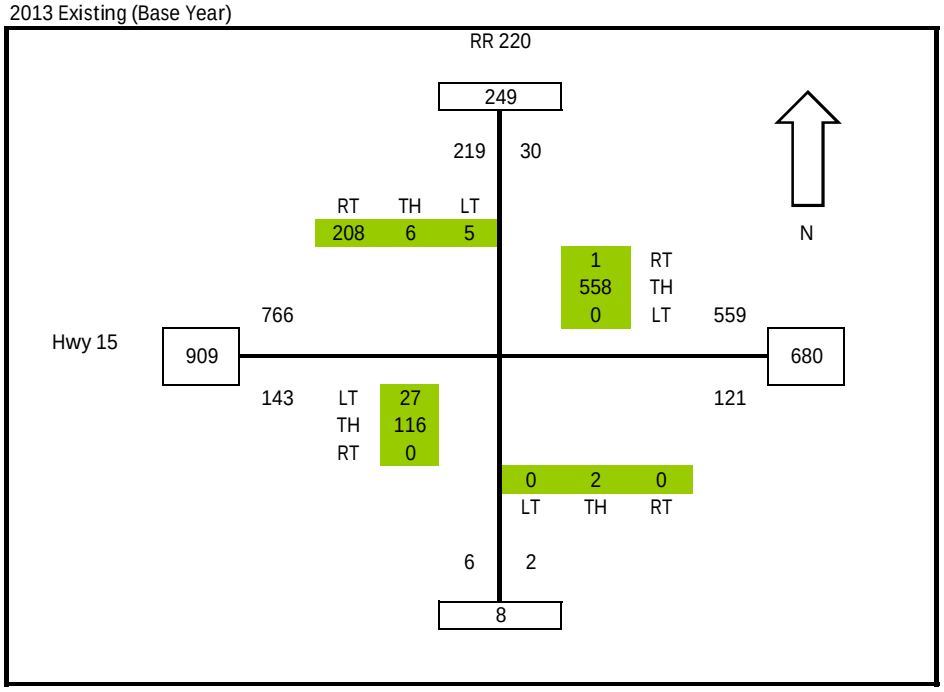

2018 Estimated (5 Year Horizon)

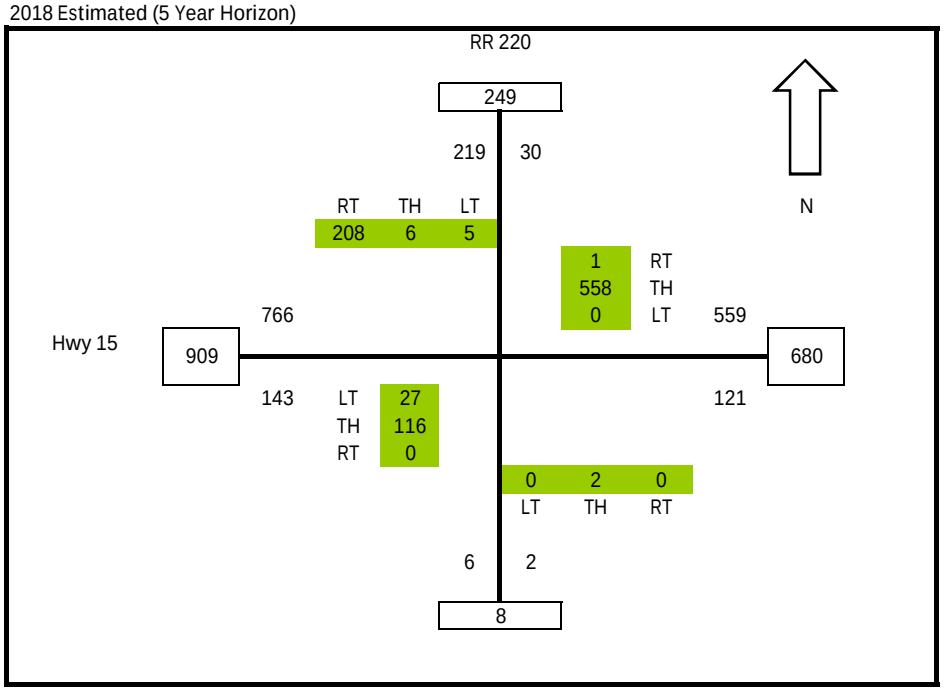

OPUS STEWART WEIR

Background Traffic (PM PEAK)

Linear Growth Rate = 0%

2023 Estimated (10 Year Horizon)

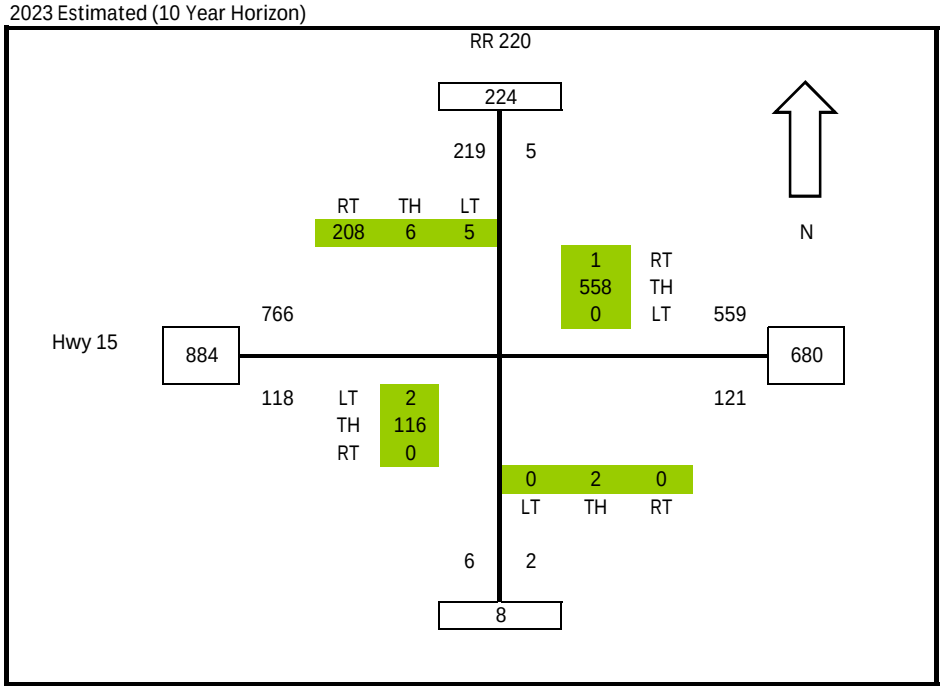

2028 Estimated (15 Year Horizon)

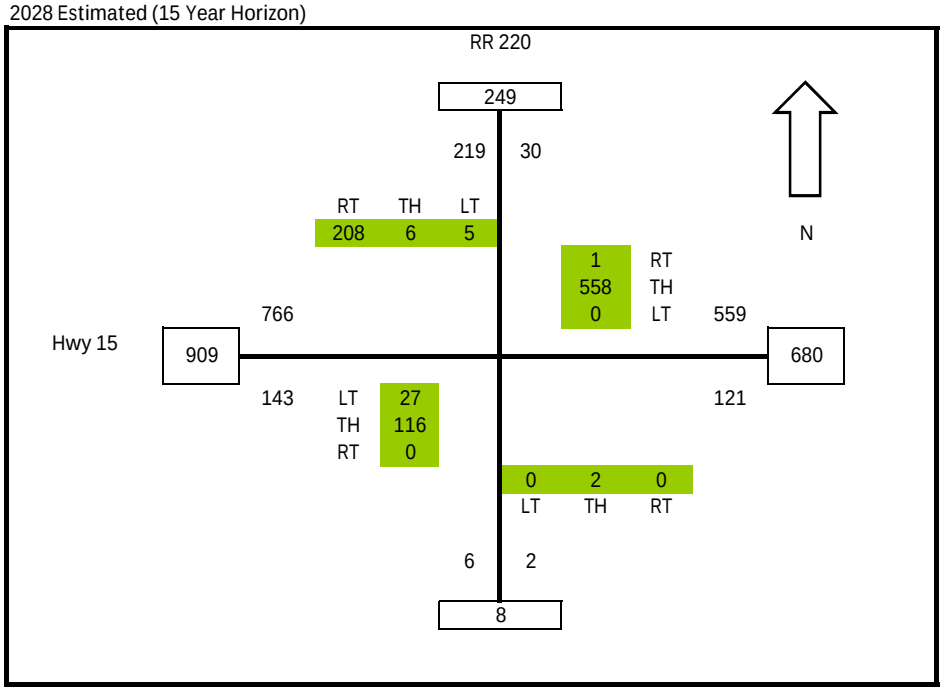

OPUS STEWART WEIR

Background Traffic (PM PEAK)

Linear Growth Rate = 0%

2033 Estimated (20 Year Horizon)

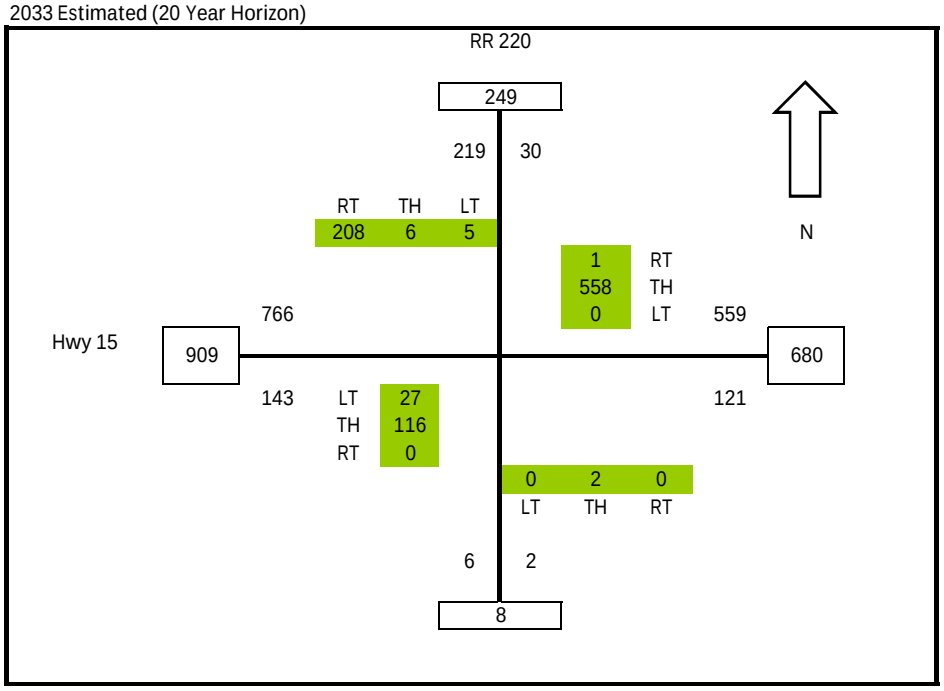

2038 Estimated (25 Year Horizon)

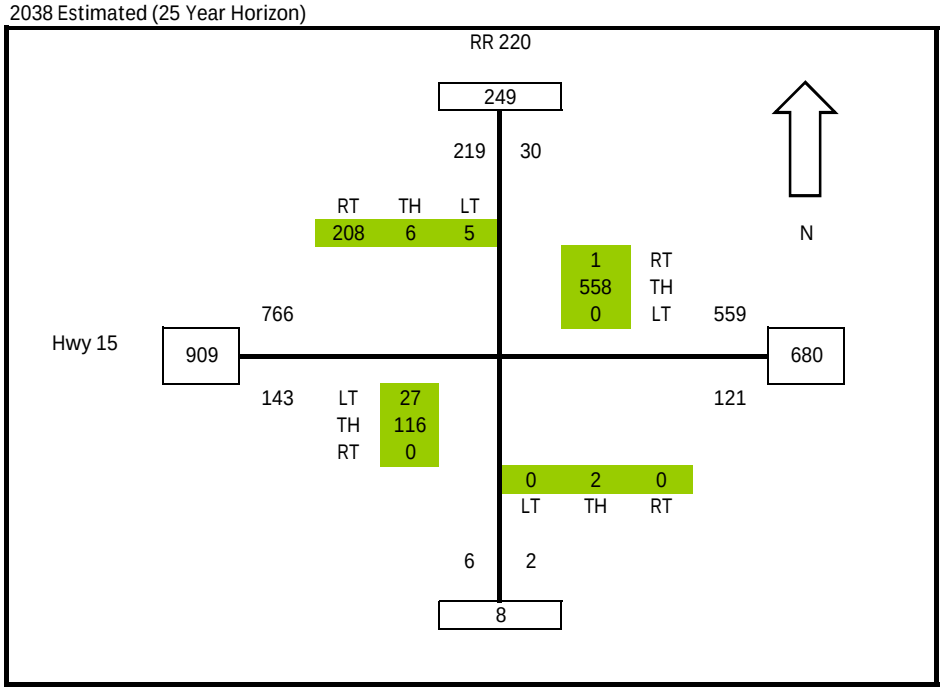

OPUS STEWART WEIR

Background Traffic (PM PEAK)

Linear Growth Rate = 2%

2013 Existing (Base Year)

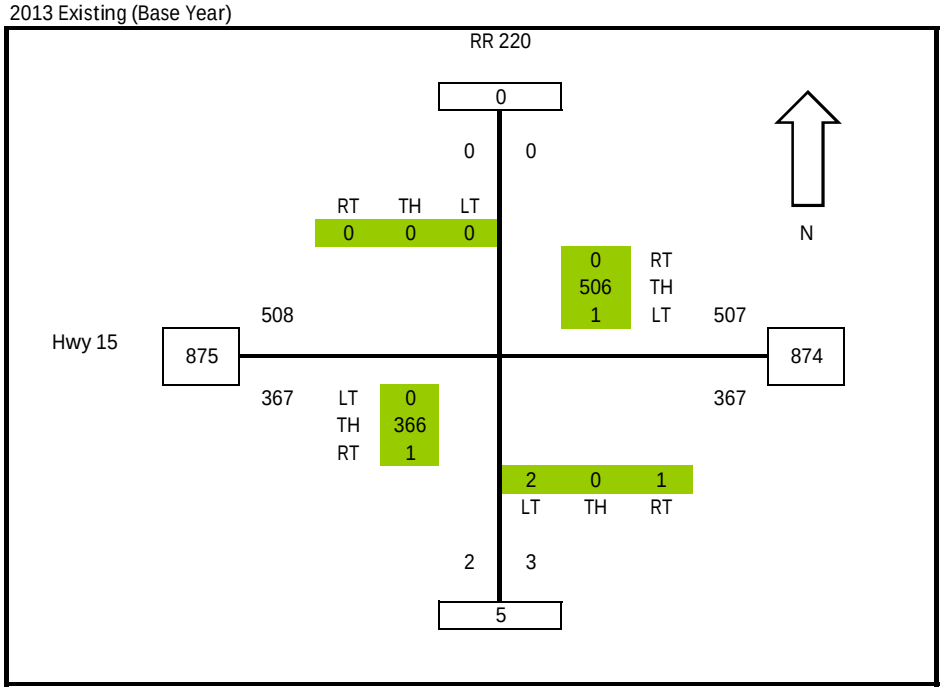

2018 Estimated (5 Year Horizon)

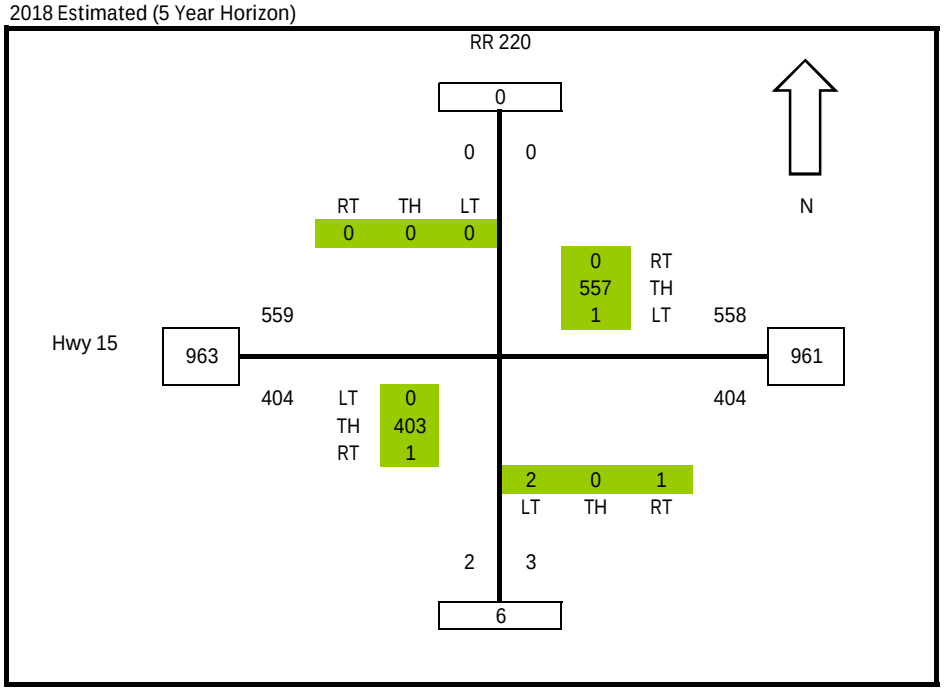

OPUS STEWART WEIR

Background Traffic (PM PEAK)

Linear Growth Rate = 2%

2023 Estimated (10 Year Horizon)

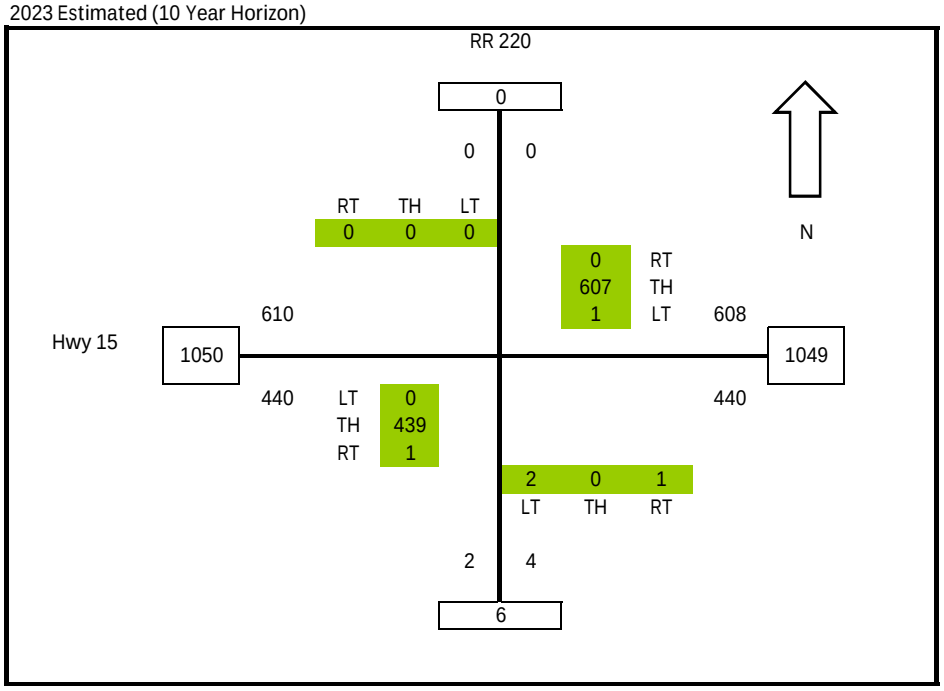

2028 Estimated (15 Year Horizon)

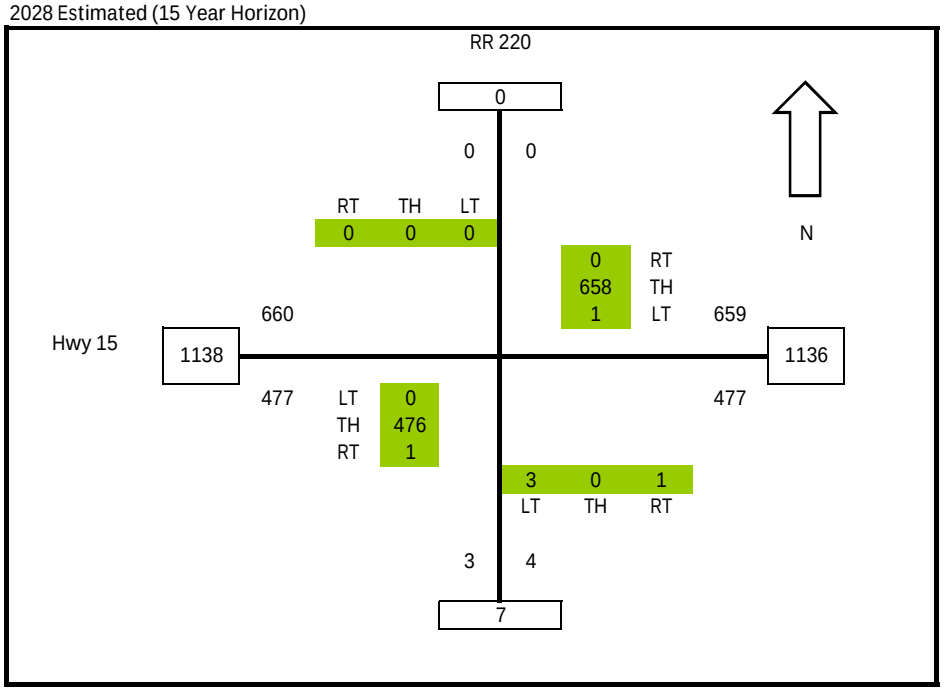

OPUS STEWART WEIR

Background Traffic (PM PEAK)

Linear Growth Rate = 2%

2033 Estimated (20 Year Horizon)

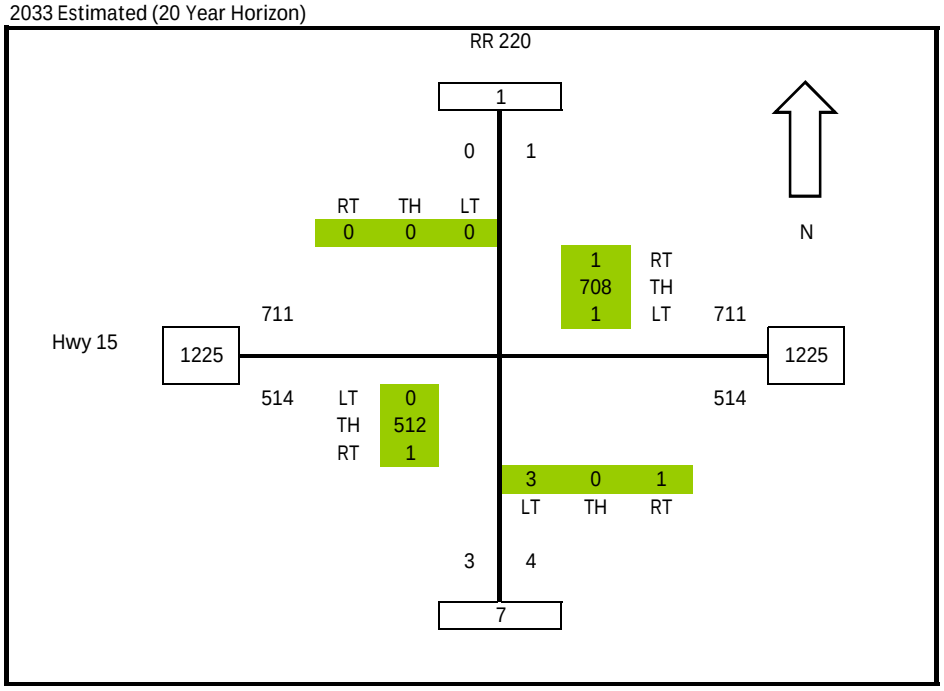

2038 Estimated (25 Year Horizon)

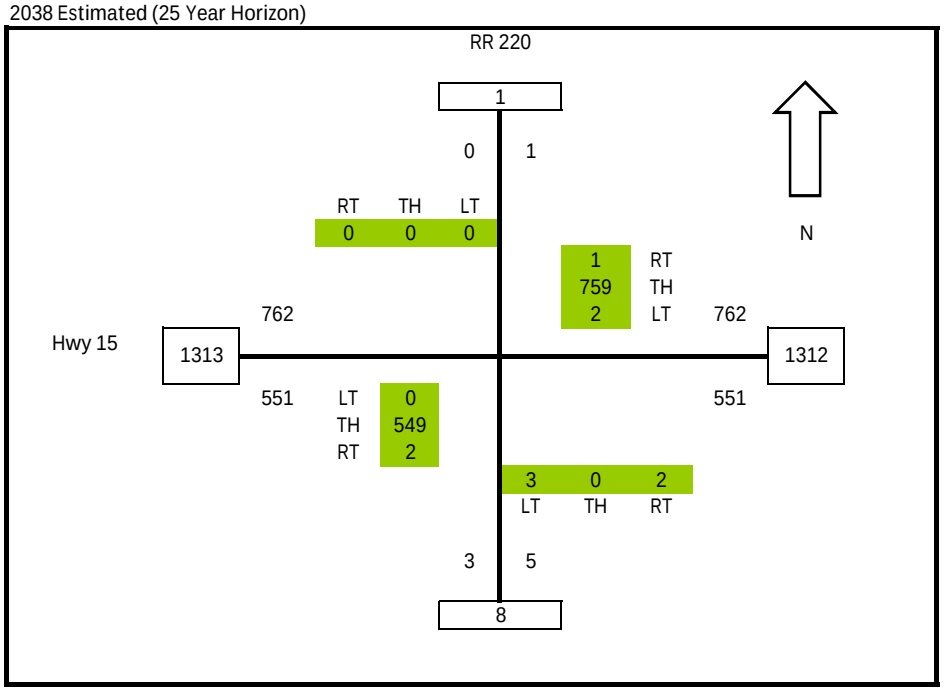

OPUS STEWART WEIR

Modified Background Traffic (PM PEAK)

Linear Growth Rate = 2%

2013 Existing (Base Year)

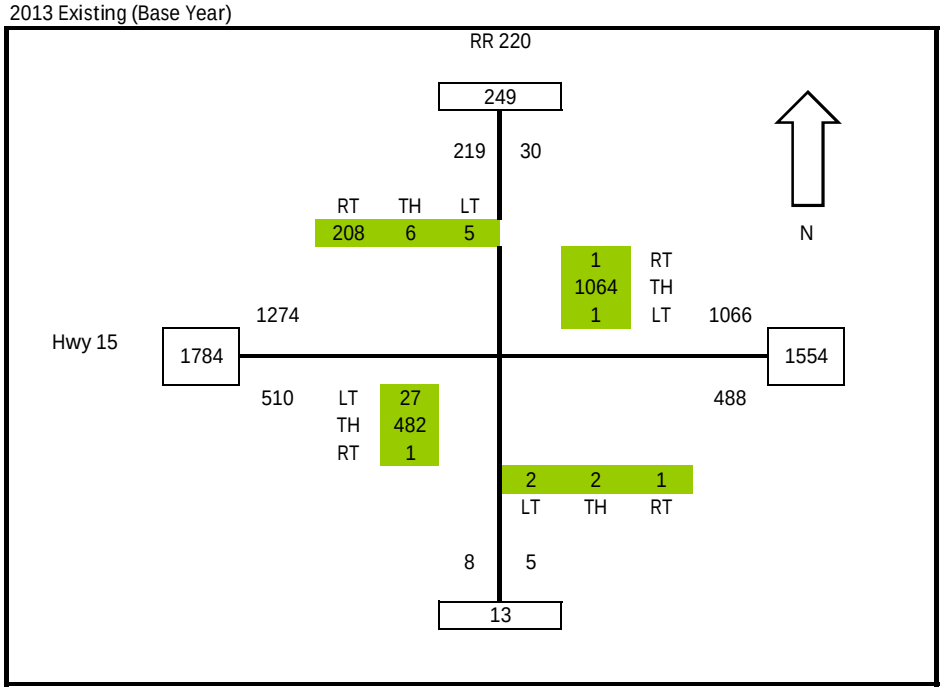

2018 Estimated (5 Year Horizon)

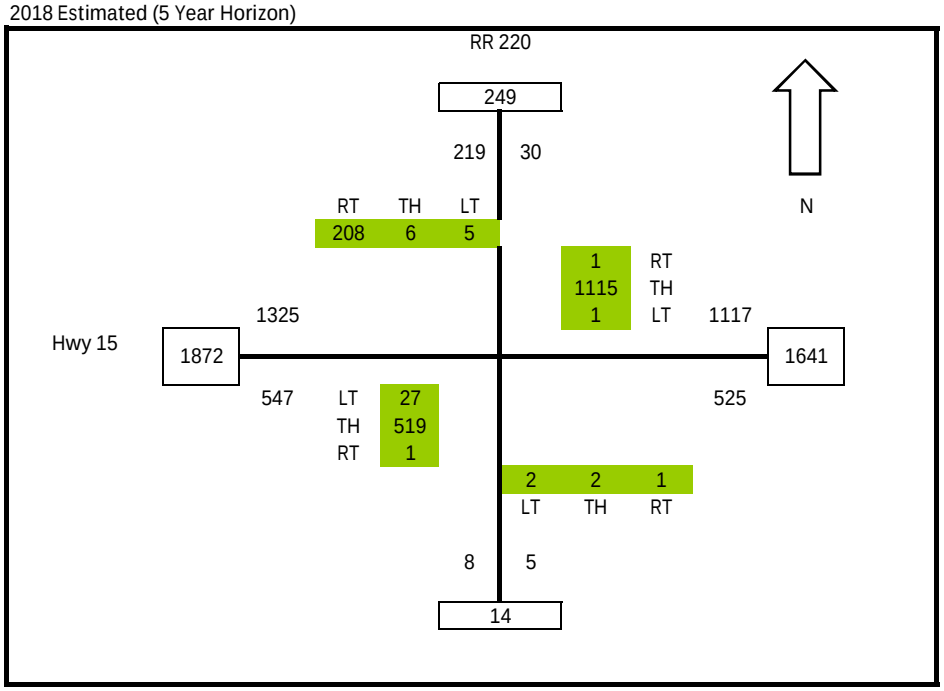

OPUS STEWART WEIR

Modified Background Traffic (PM PEAK)

Linear Growth Rate = 2%

2023 Estimated (10 Year Horizon)

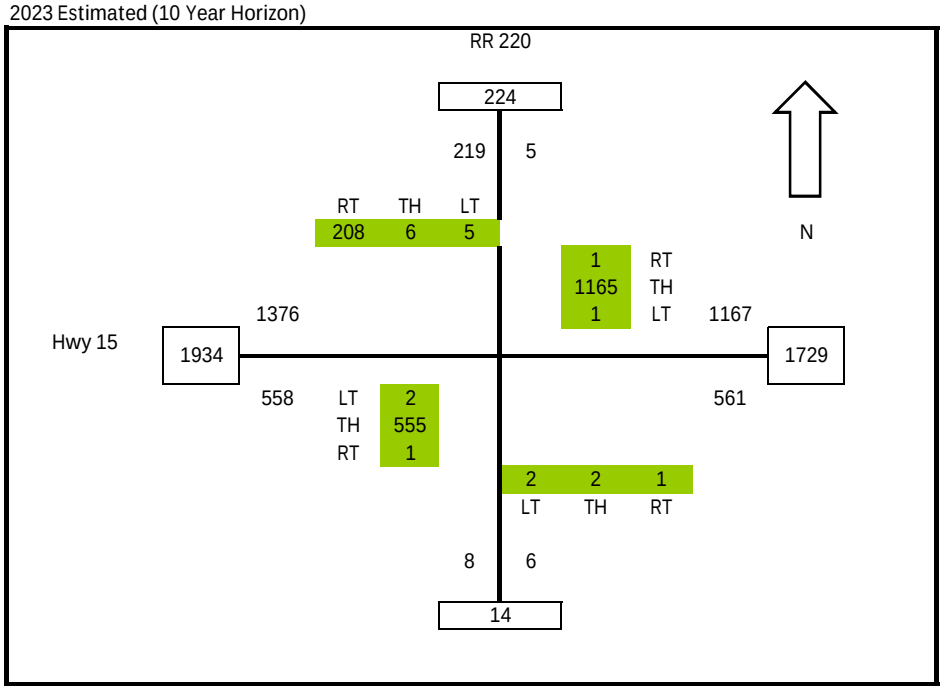

2028 Estimated (15 Year Horizon)

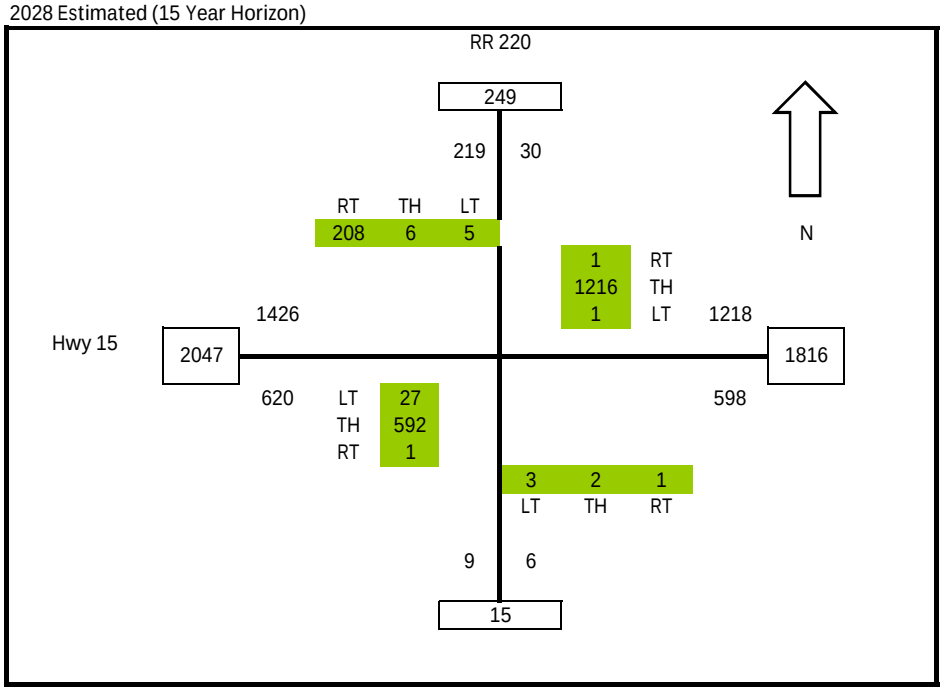

OPUS STEWART WEIR

Modified Background Traffic (PM PEAK)

Linear Growth Rate = 2%

2033 Estimated (20 Year Horizon)

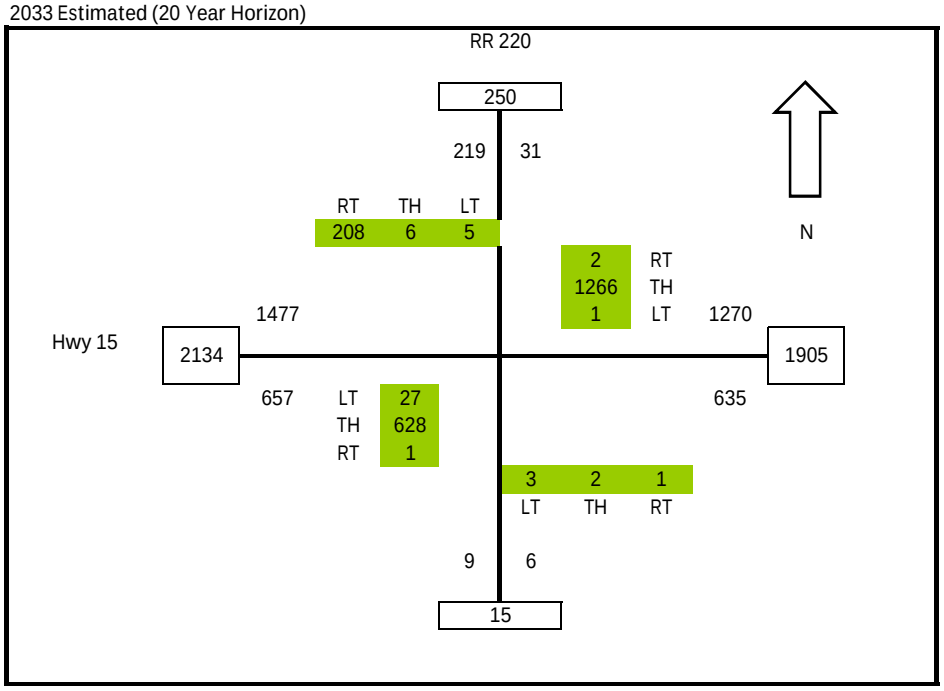

2038 Estimated (25 Year Horizon)

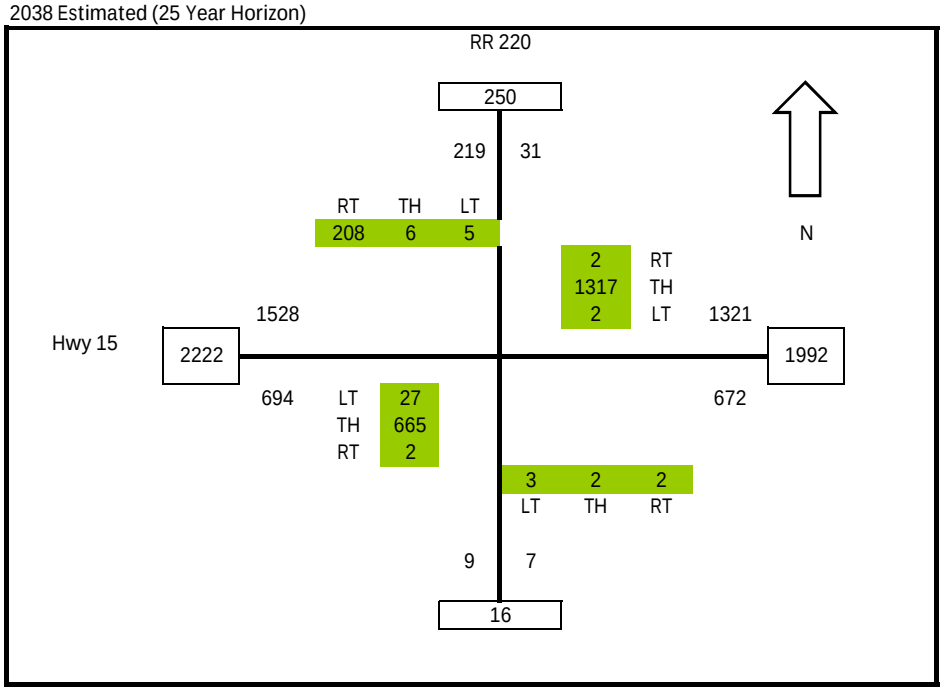

OPUS STEWART WEIR

Background Traffic (AM PEAK)

Linear Growth Rate = 0%

2013 Existing (Base Year)

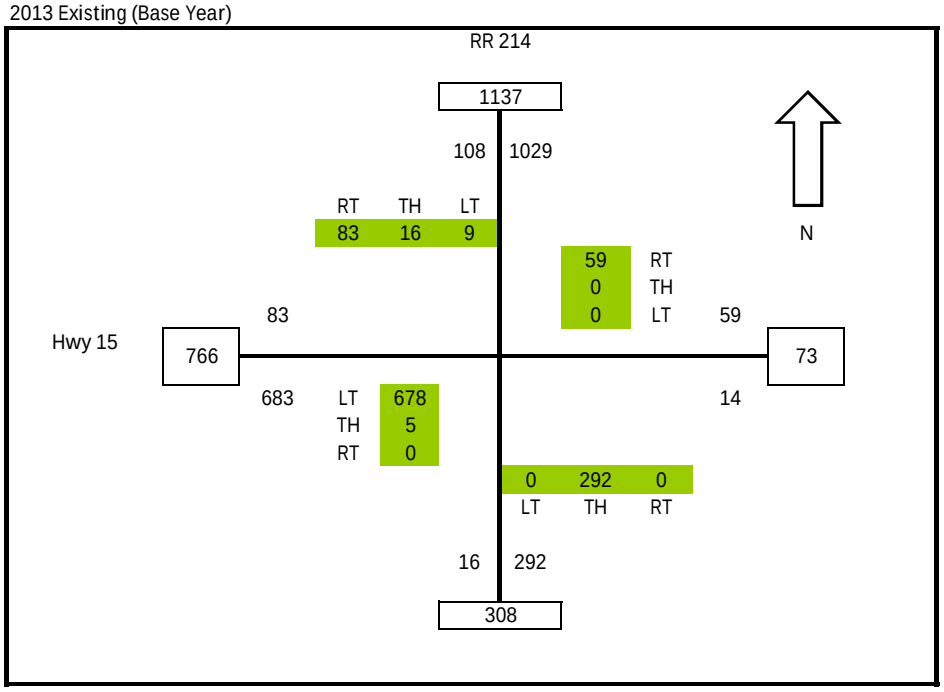

2018 Estimated (5 years Horizon)

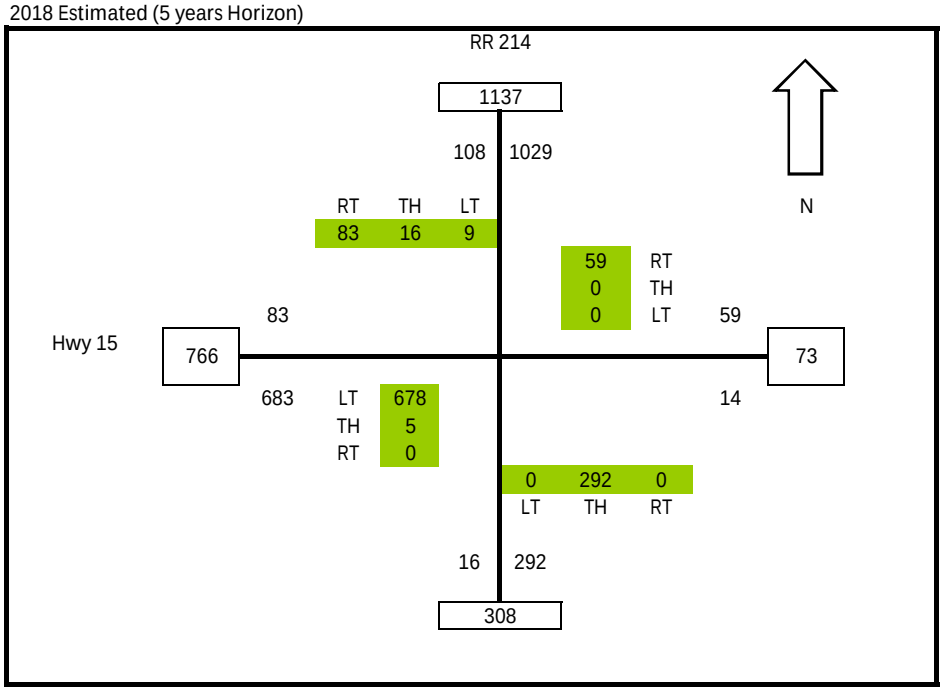

OPUS STEWART WEIR

Background Traffic (AM PEAK)

Linear Growth Rate = 0%

2023 Estimated (10 Year Horizon)

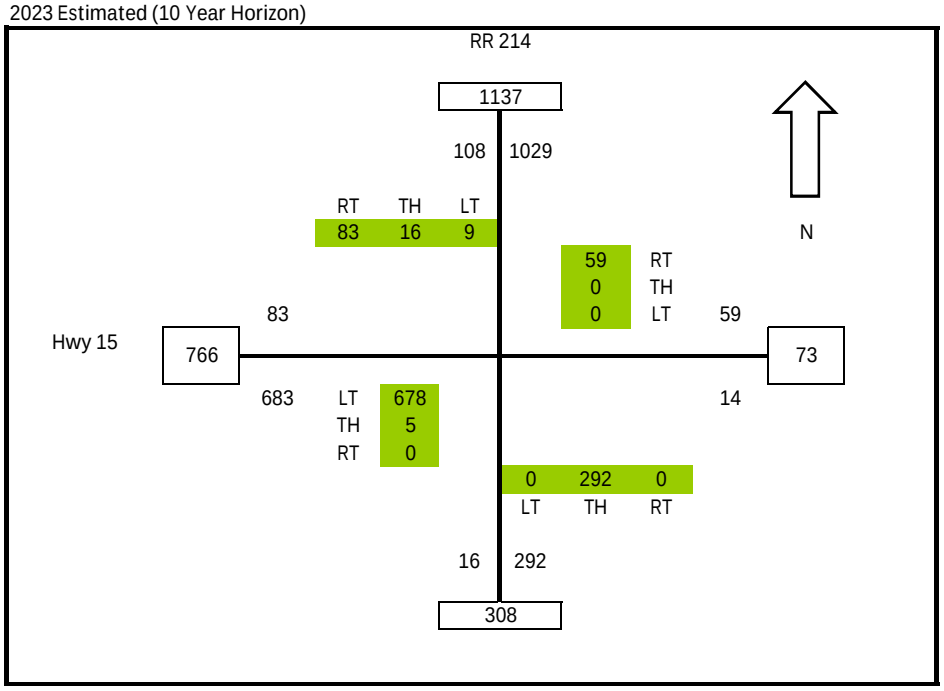

2028 Estimated (15 Year Horizon)

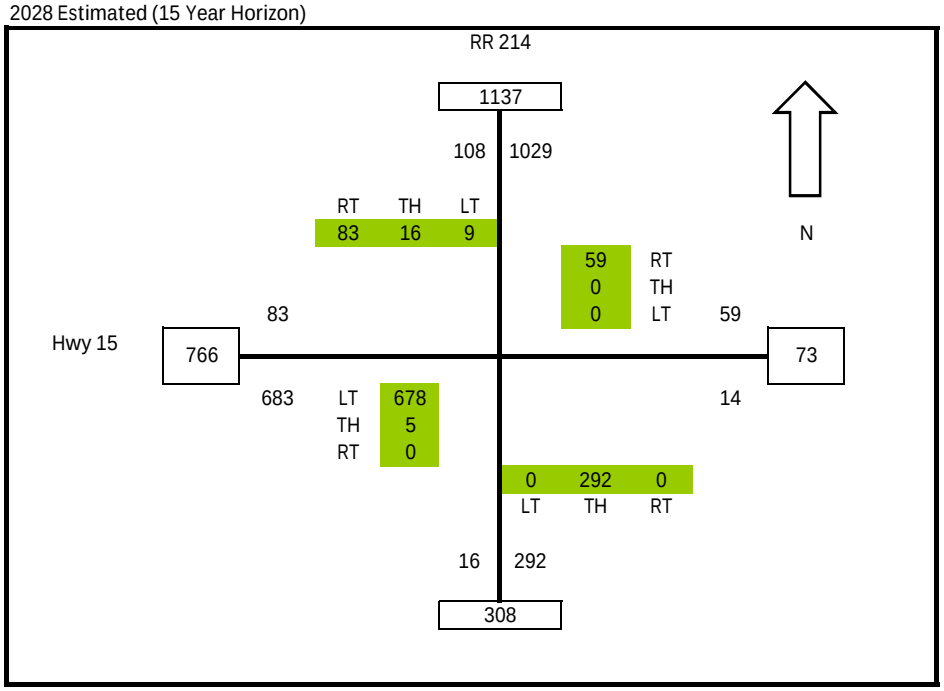

OPUS STEWART WEIR

Background Traffic (AM PEAK)

Linear Growth Rate = 0%

2033 Estimated (20 Year Horizon)

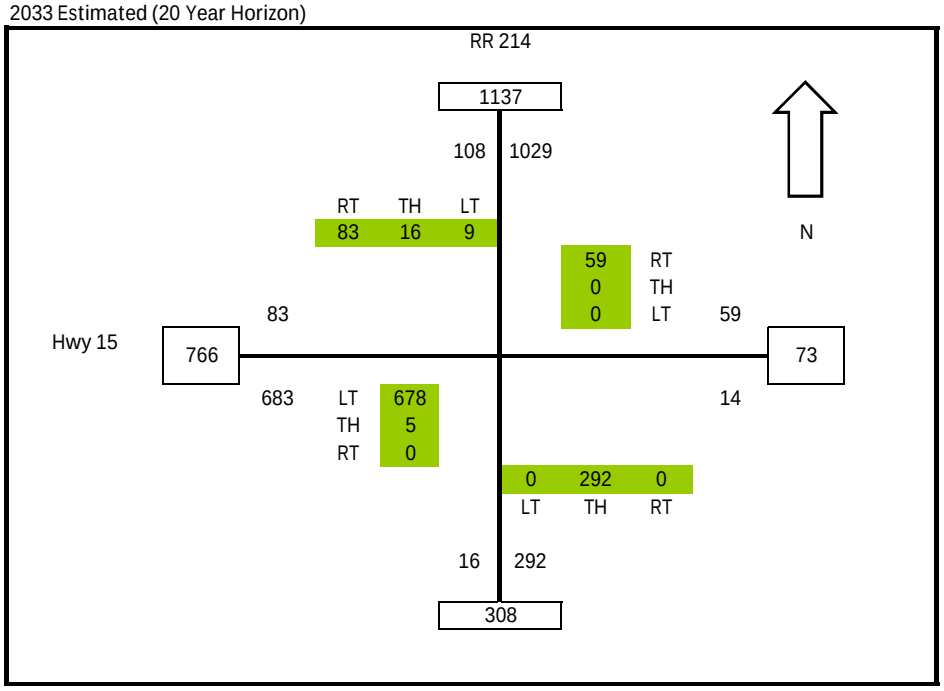

2038 Estimated (25 Year Horizon)

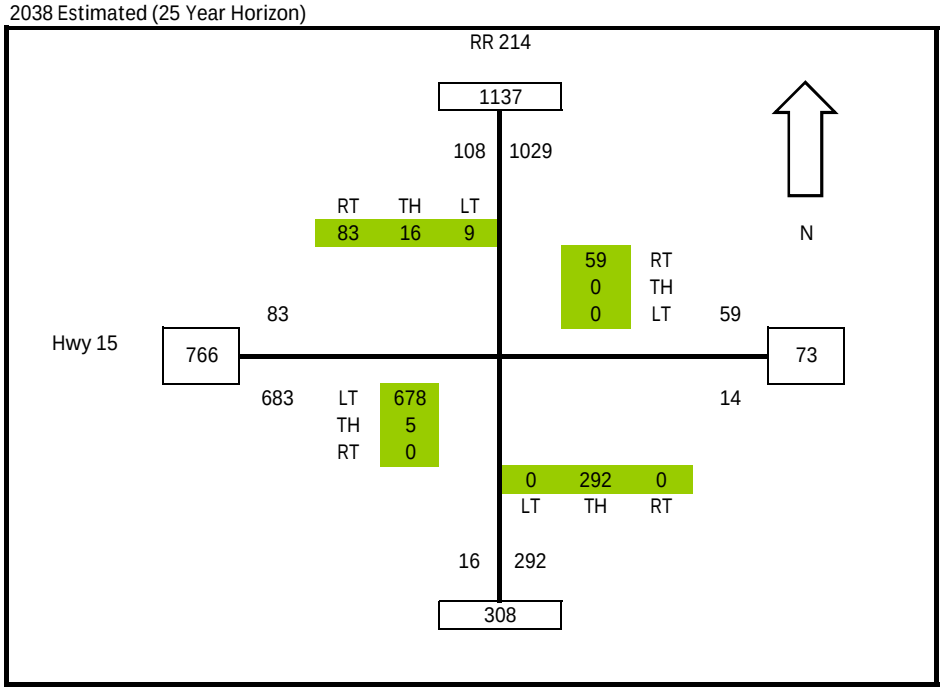

OPUS STEWART WEIR

Background Traffic (AM PEAK)

Linear Growth Rate = 2%

2013 Existing (Base Year)

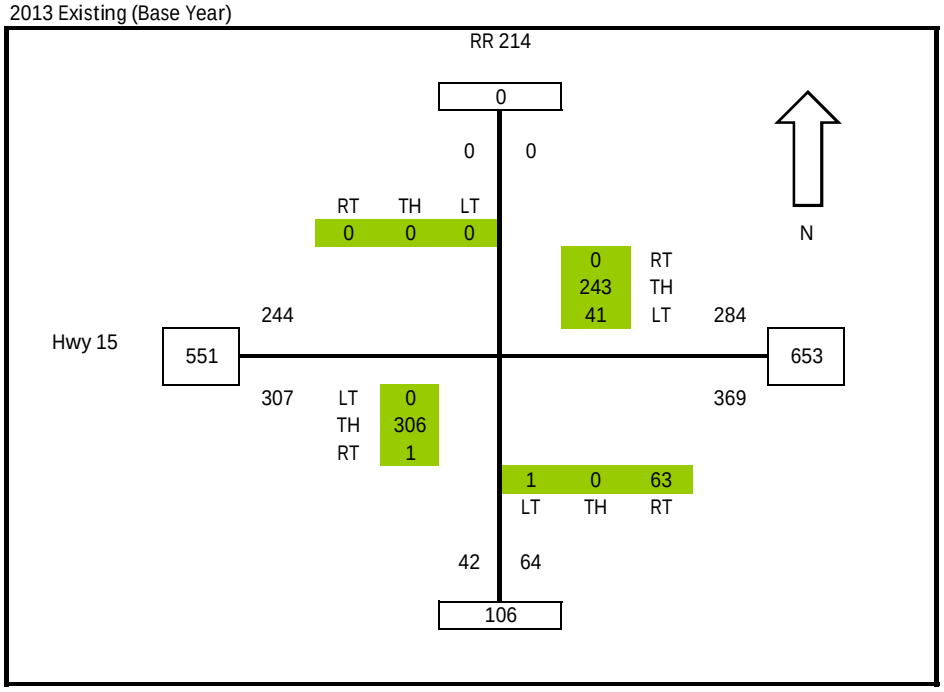

2018 Estimated (5 years Horizon)

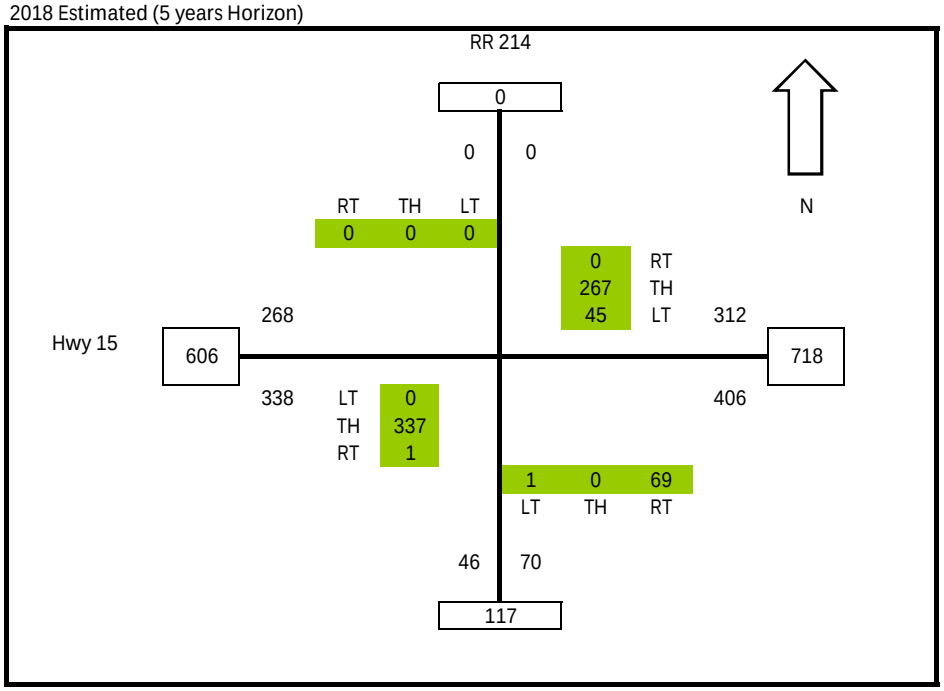

OPUS STEWART WEIR

Background Traffic (AM PEAK)

Linear Growth Rate = 2%

2023 Estimated (10 Year Horizon)

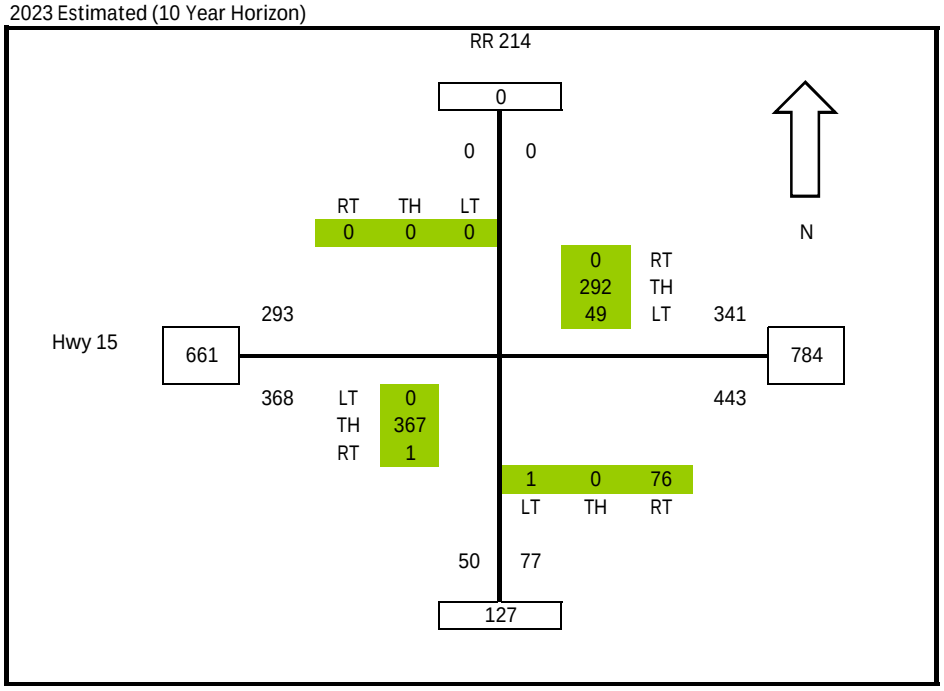

2028 Estimated (15 Year Horizon)

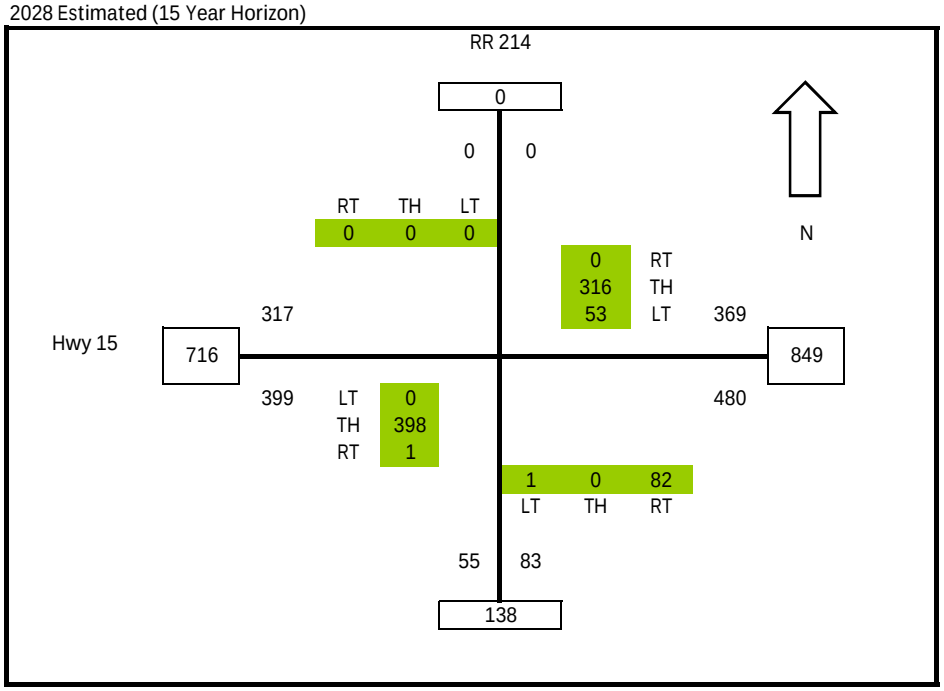

OPUS STEWART WEIR

Background Traffic (AM PEAK)

Linear Growth Rate = 2%

2033 Estimated (20 Year Horizon)

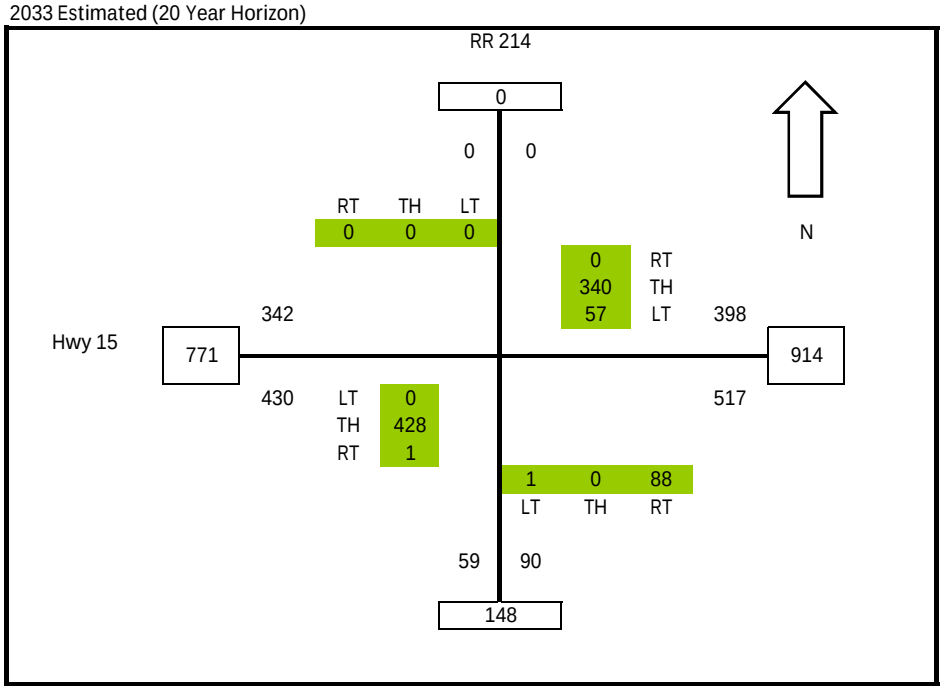

2038 Estimated (25 Year Horizon)

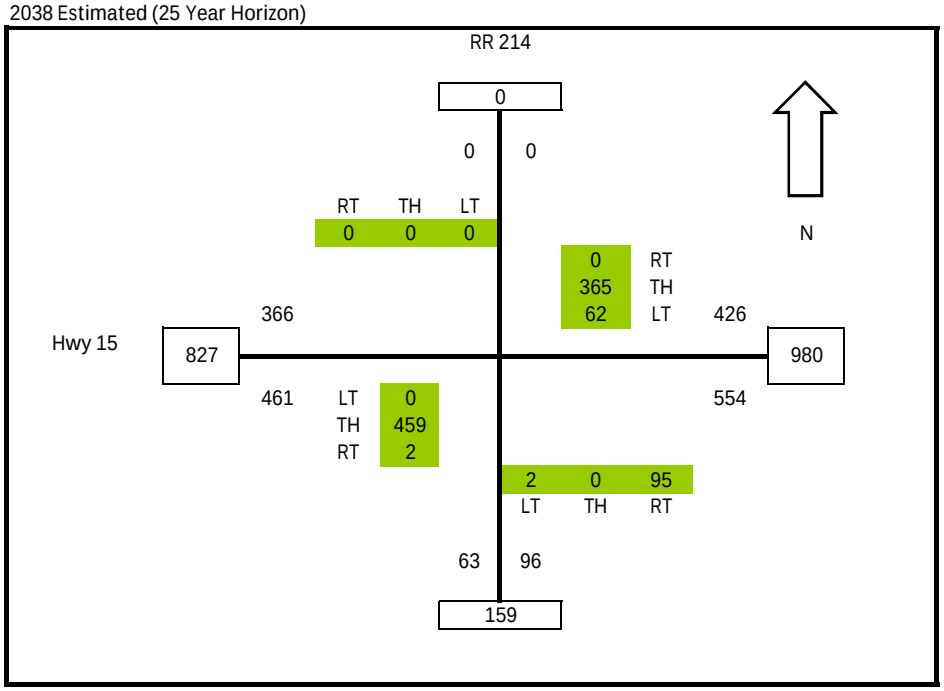

OPUS STEWART WEIR

Modified Background Traffic (AM PEAK)

Linear Growth Rate = 2%

2013 Existing (Base Year)

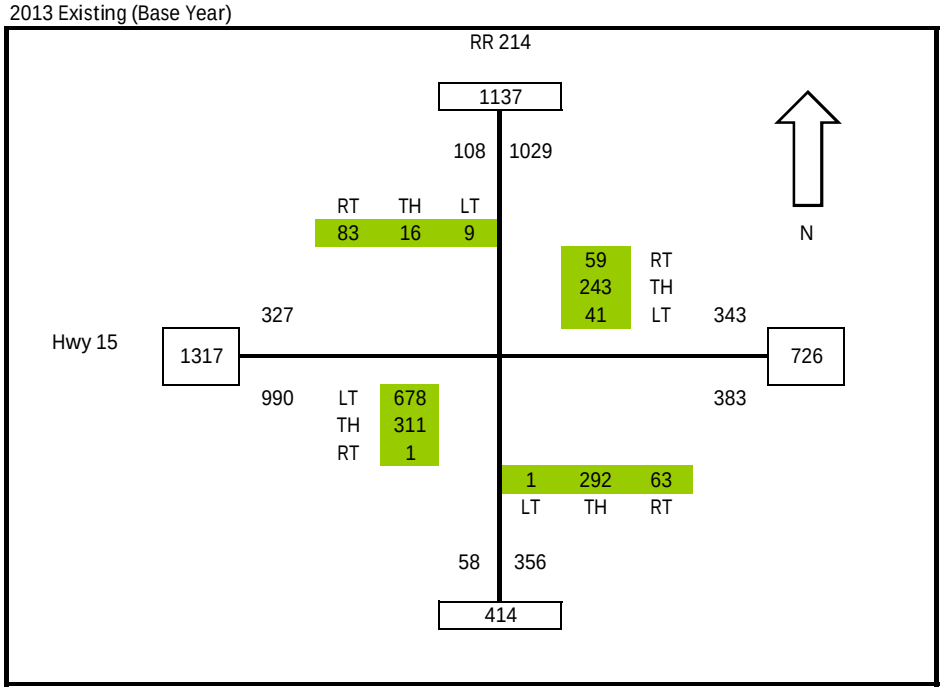

2018 Estimated (5 years Horizon)

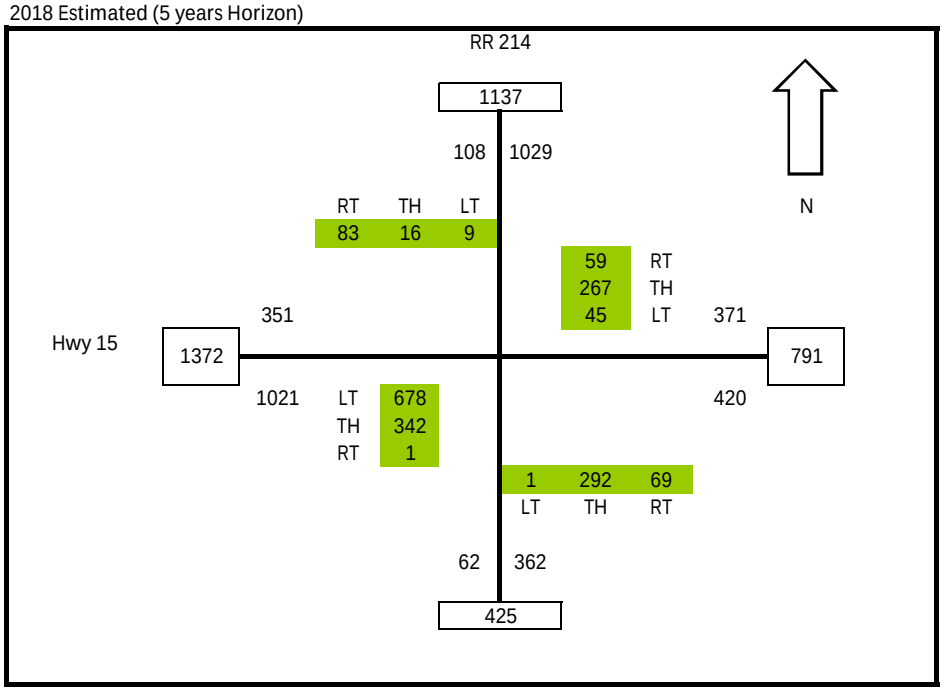

OPUS STEWART WEIR

Modified Background Traffic (AM PEAK)

Linear Growth Rate = 2%

2023 Estimated (10 Year Horizon)

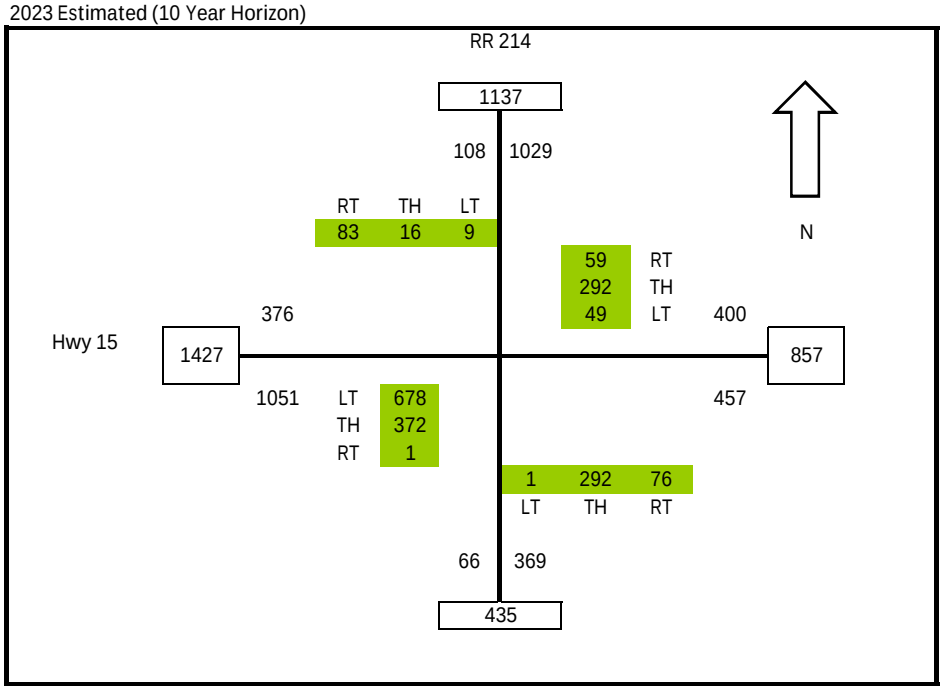

2028 Estimated (15 Year Horizon)

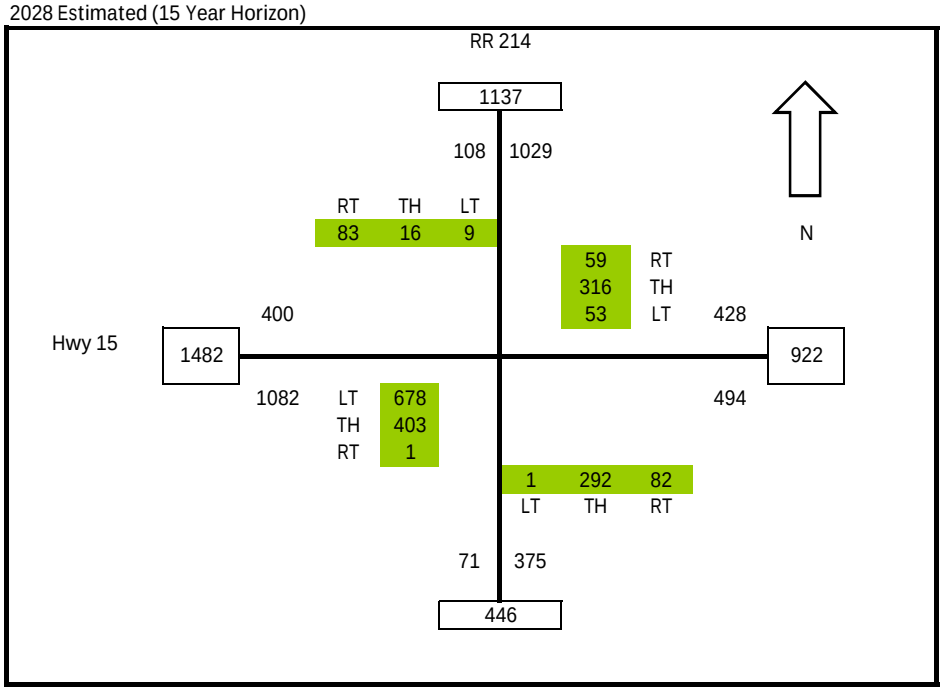

OPUS STEWART WEIR

Modified Background Traffic (AM PEAK)

Linear Growth Rate = 2%

2033 Estimated (20 Year Horizon)

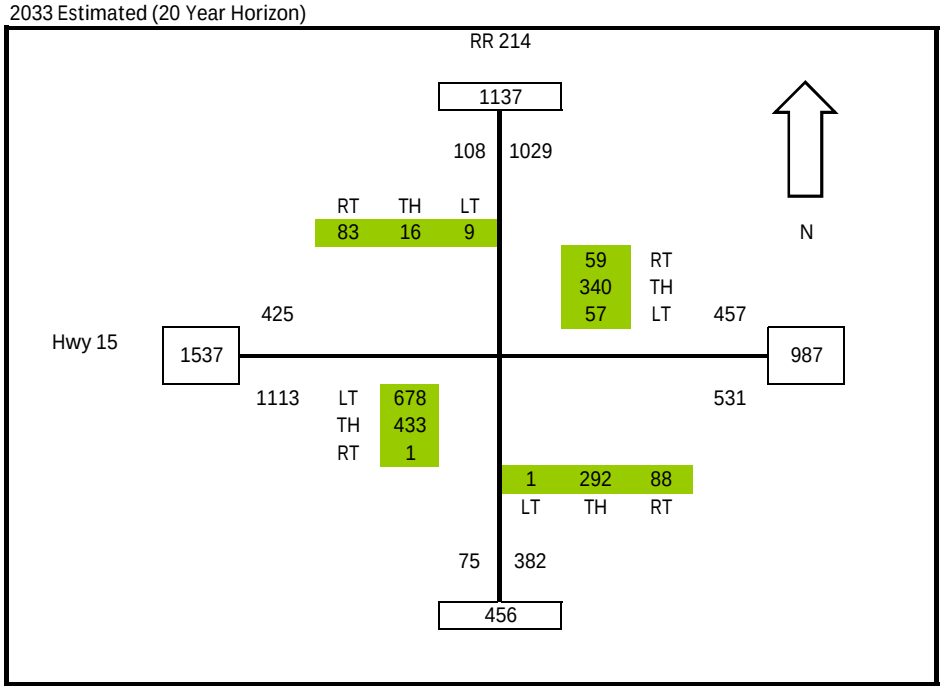

2038 Estimated (25 Year Horizon)

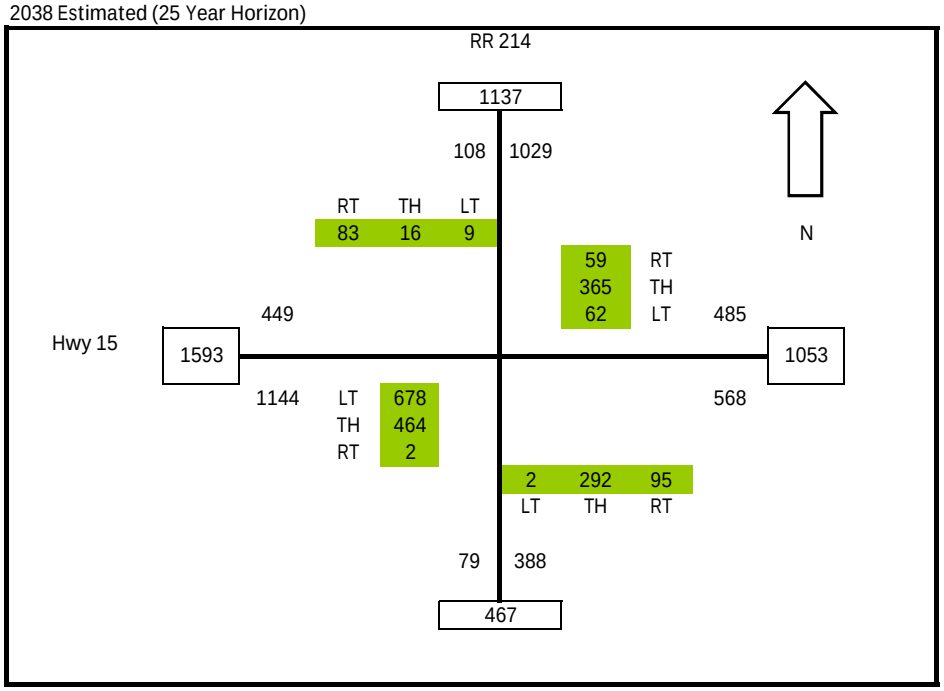

OPUS STEWART WEIR

Background Traffic (PM PEAK)

Linear Growth Rate = 0%

2013 Existing (Base Year)

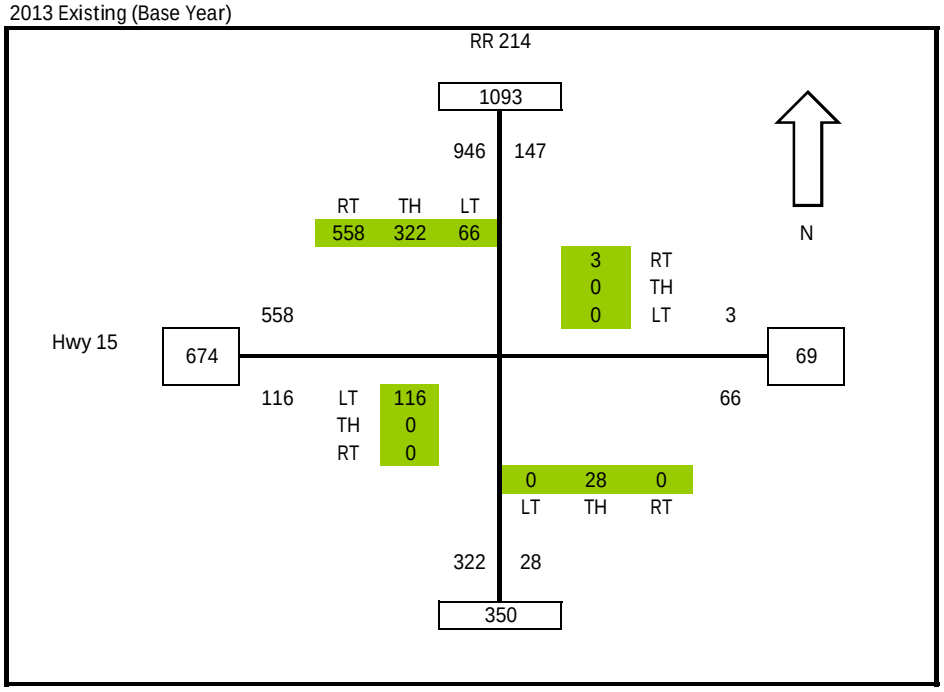

2018 Estimated (5 years Horizon)

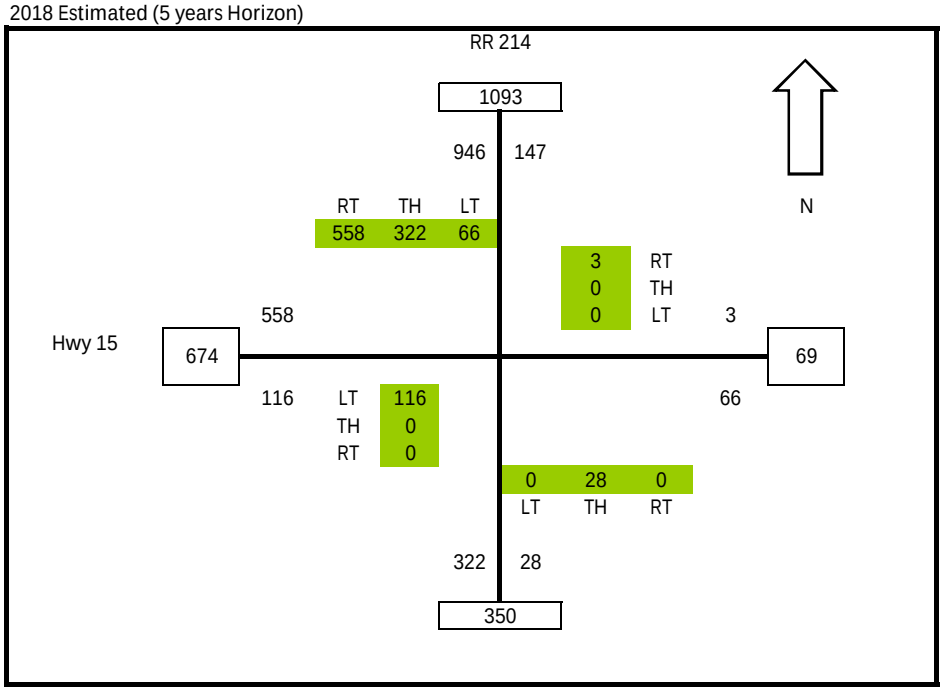

OPUS STEWART WEIR

Background Traffic (PM PEAK)

Linear Growth Rate = 0%

2023 Estimated (10 Year Horizon)

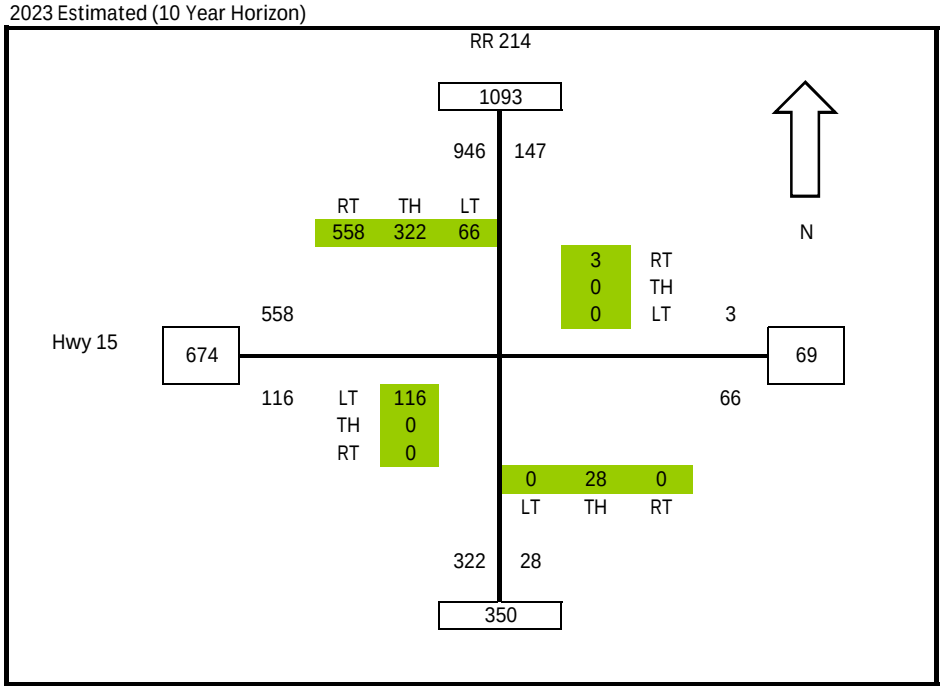

2028 Estimated (15 Year Horizon)

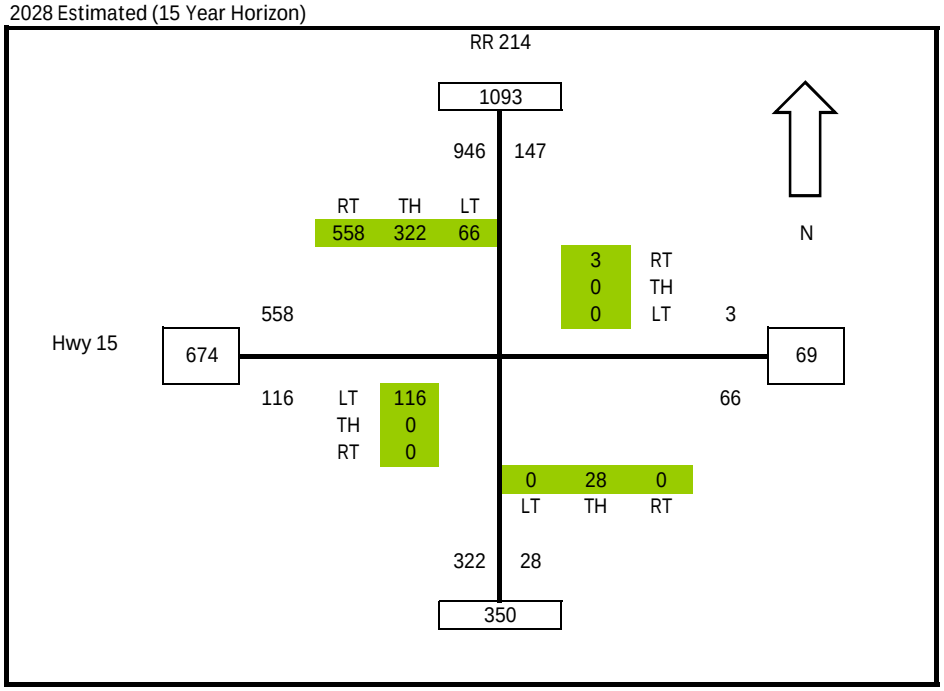

OPUS STEWART WEIR

Background Traffic (PM PEAK)

Linear Growth Rate = 0%

2033 Estimated (20 Year Horizon)

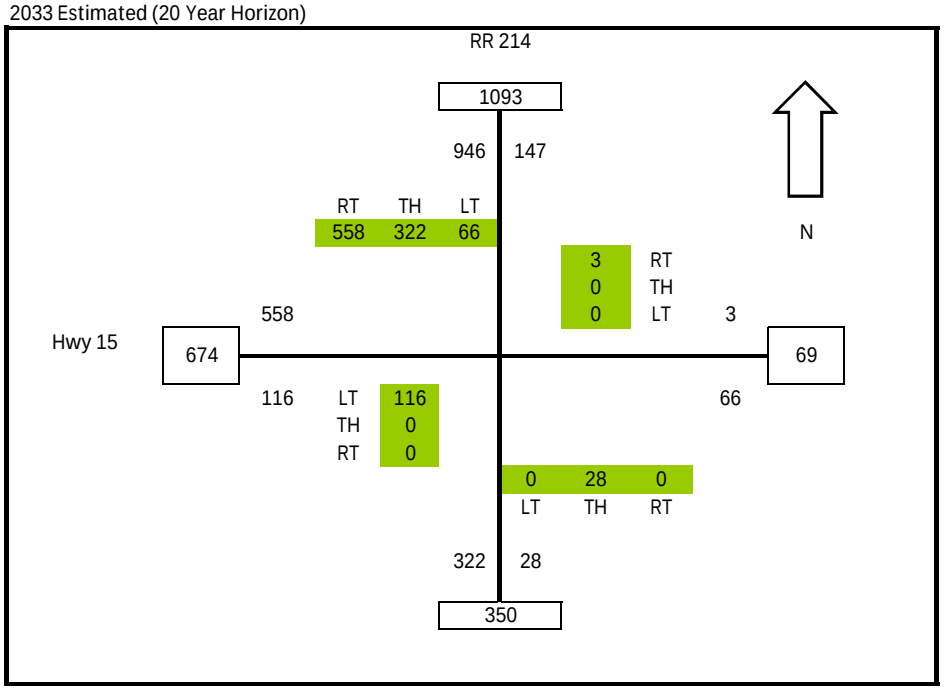

2038 Estimated (25 Year Horizon)

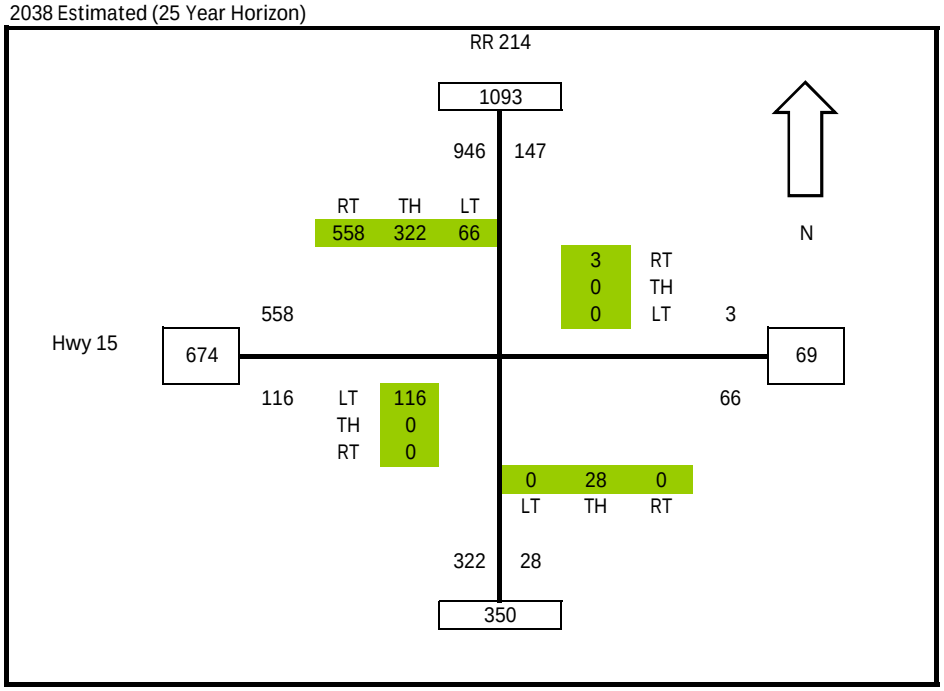

OPUS STEWART WEIR

Background Traffic (PM PEAK)

Linear Growth Rate = 2%

2013 Existing (Base Year)

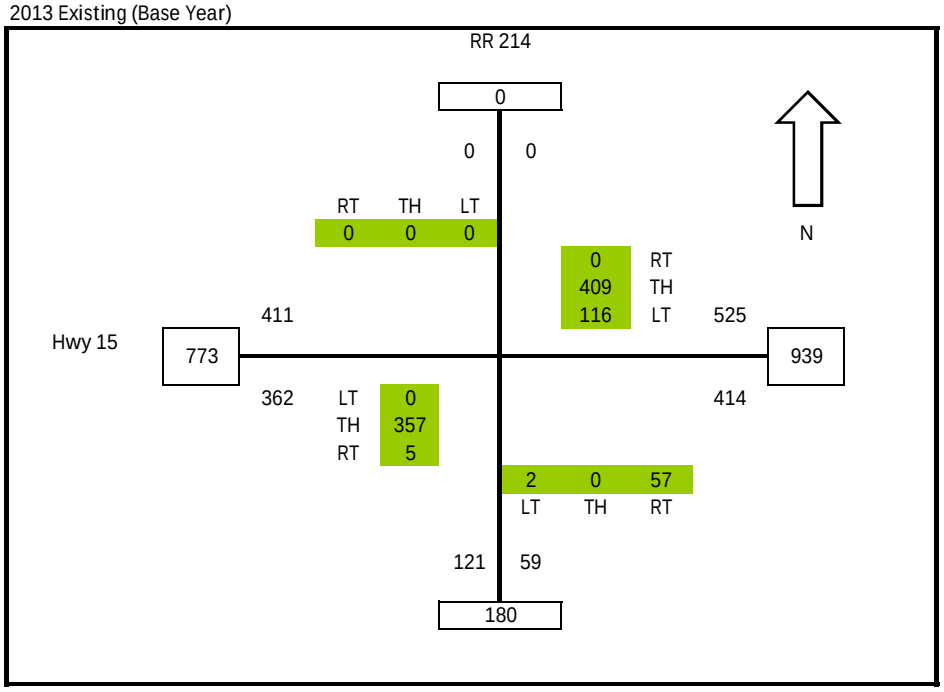

2018 Estimated (5 years Horizon)

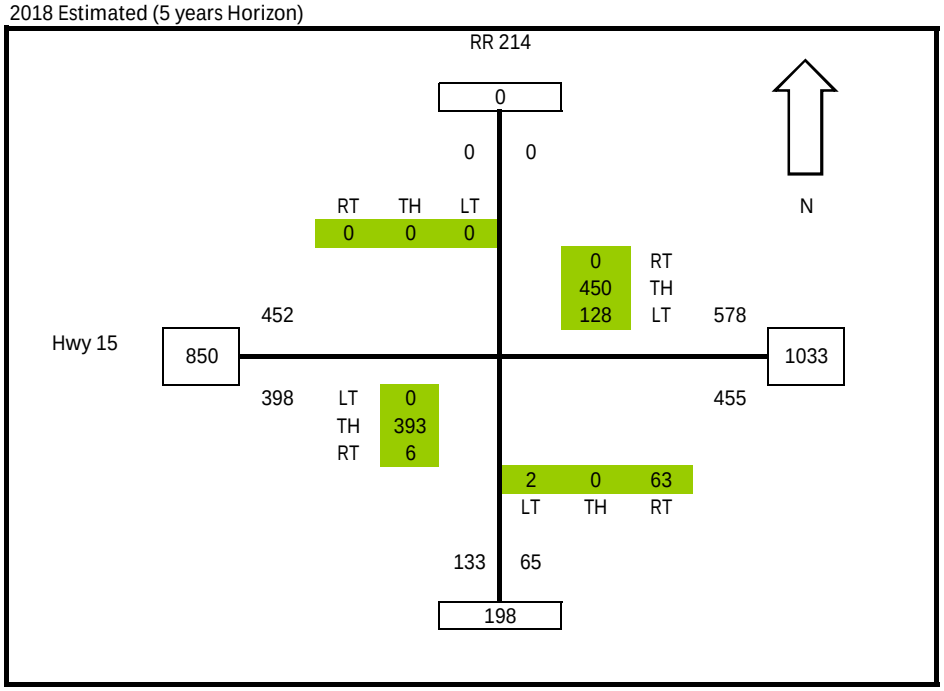

OPUS STEWART WEIR

Background Traffic (PM PEAK)

Linear Growth Rate = 2%

2023 Estimated (10 Year Horizon)

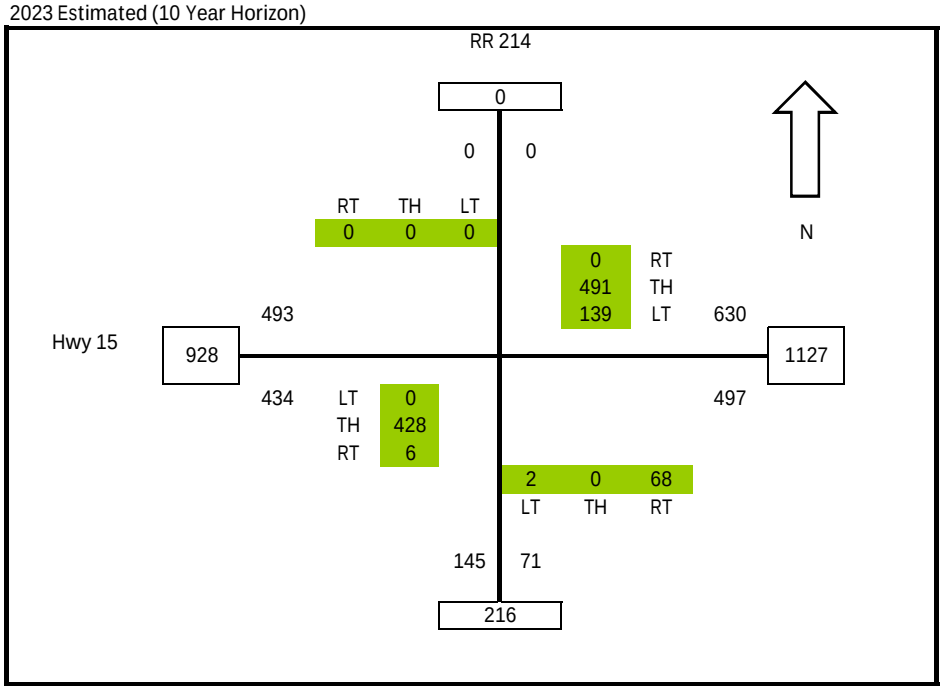

2028 Estimated (15 Year Horizon)

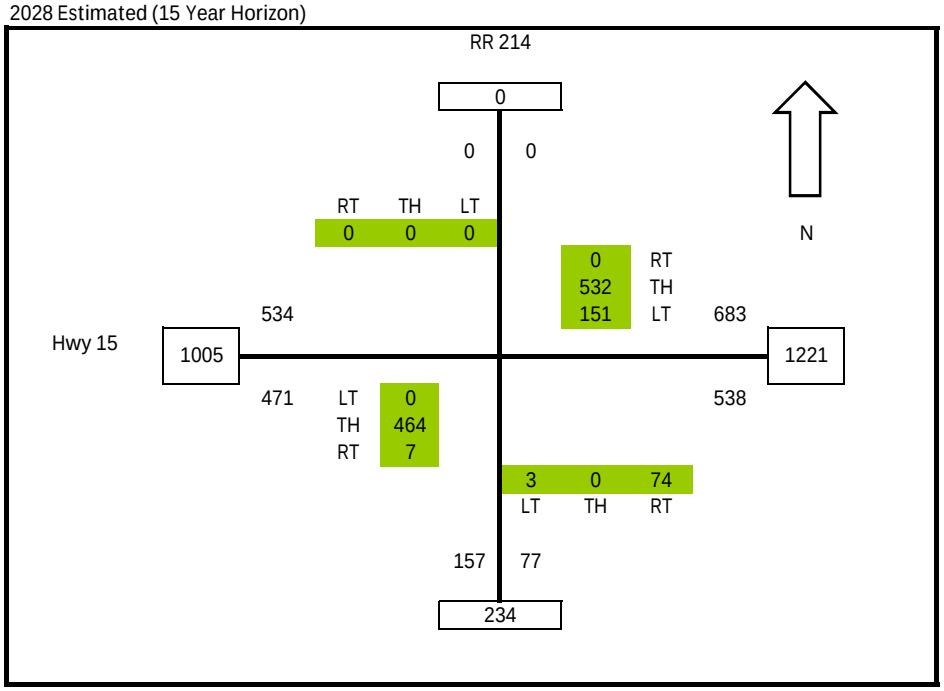

OPUS STEWART WEIR

Background Traffic (PM PEAK)

Linear Growth Rate = 2%

2033 Estimated (20 Year Horizon)

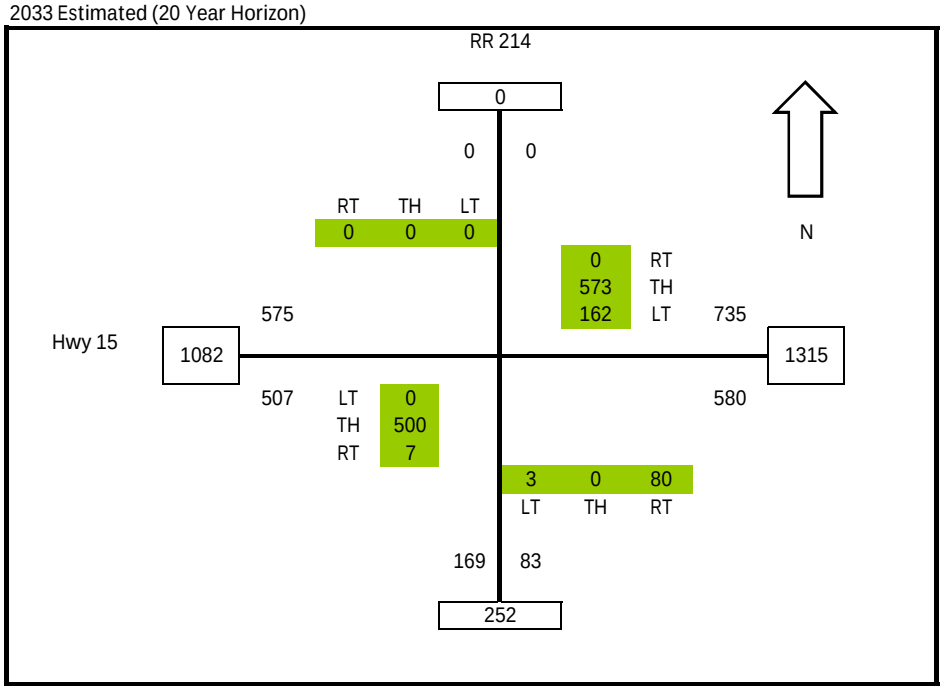

2038 Estimated (25 Year Horizon)

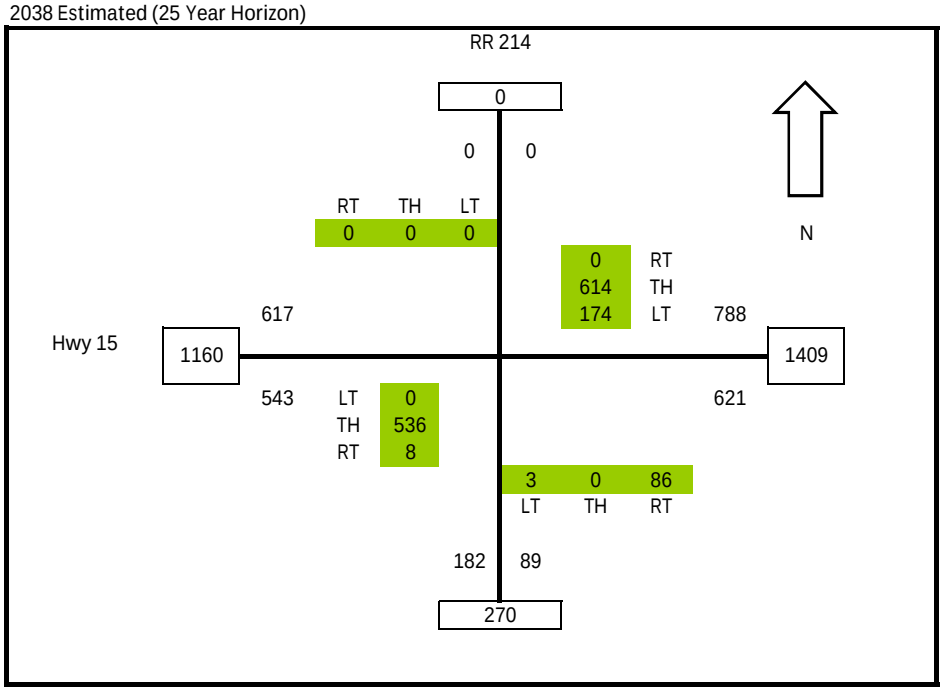

OPUS STEWART WEIR

Modified Background Traffic (PM PEAK)

Linear Growth Rate = 2%

2013 Existing (Base Year)

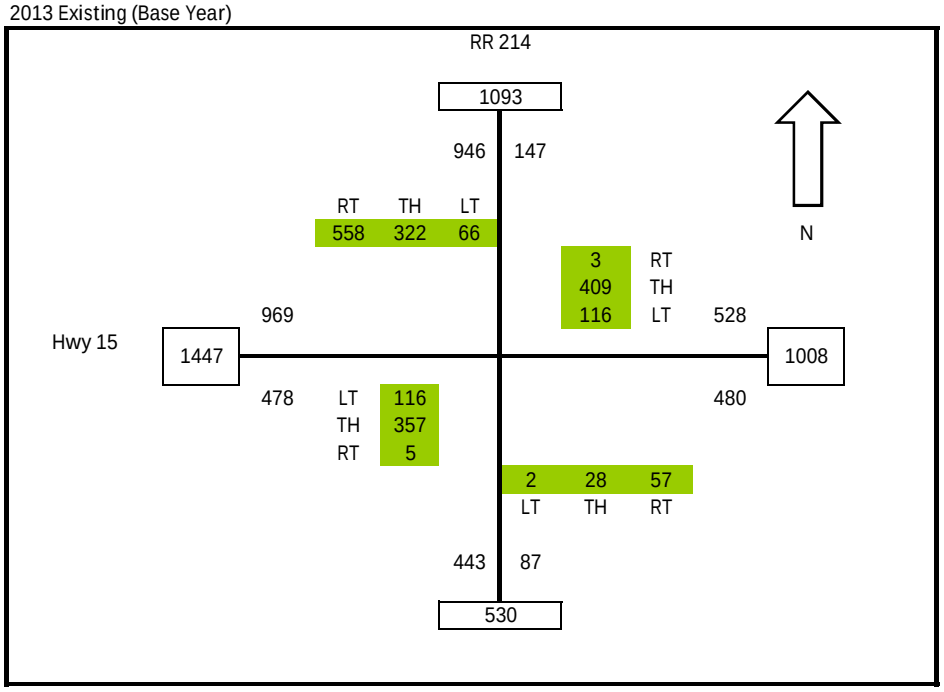

2018 Estimated (5 years Horizon)

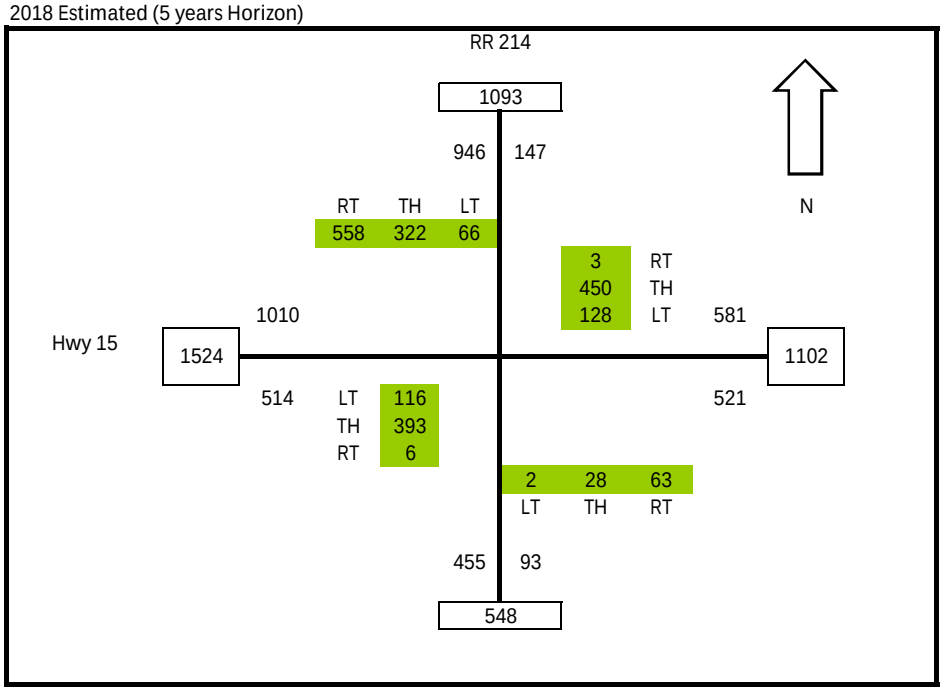

OPUS STEWART WEIR

Modified Background Traffic (PM PEAK)

Linear Growth Rate = 2%

2023 Estimated (10 Year Horizon)

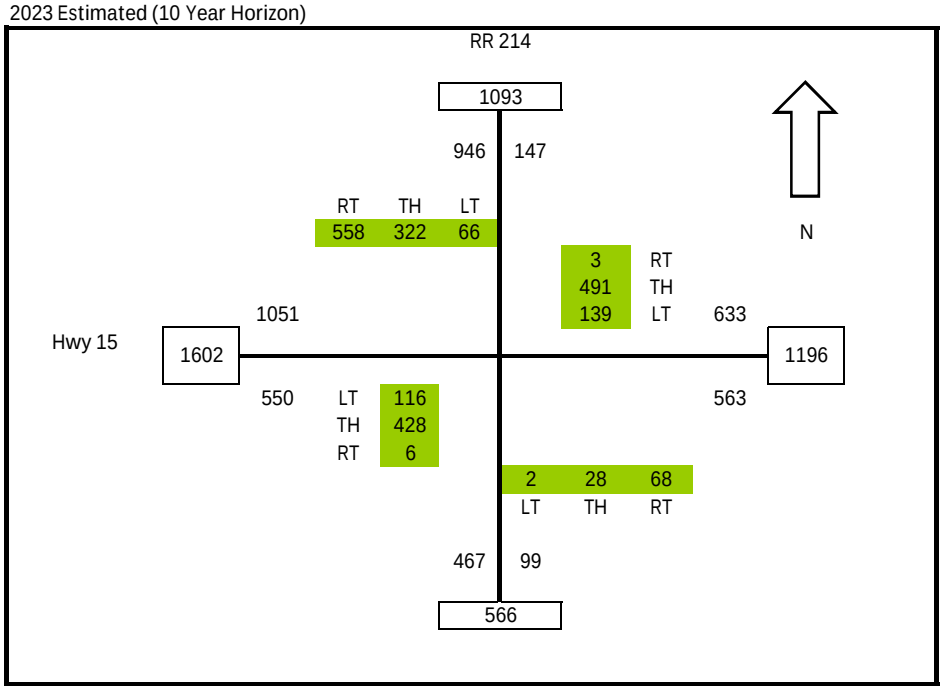

2028 Estimated (15 Year Horizon)

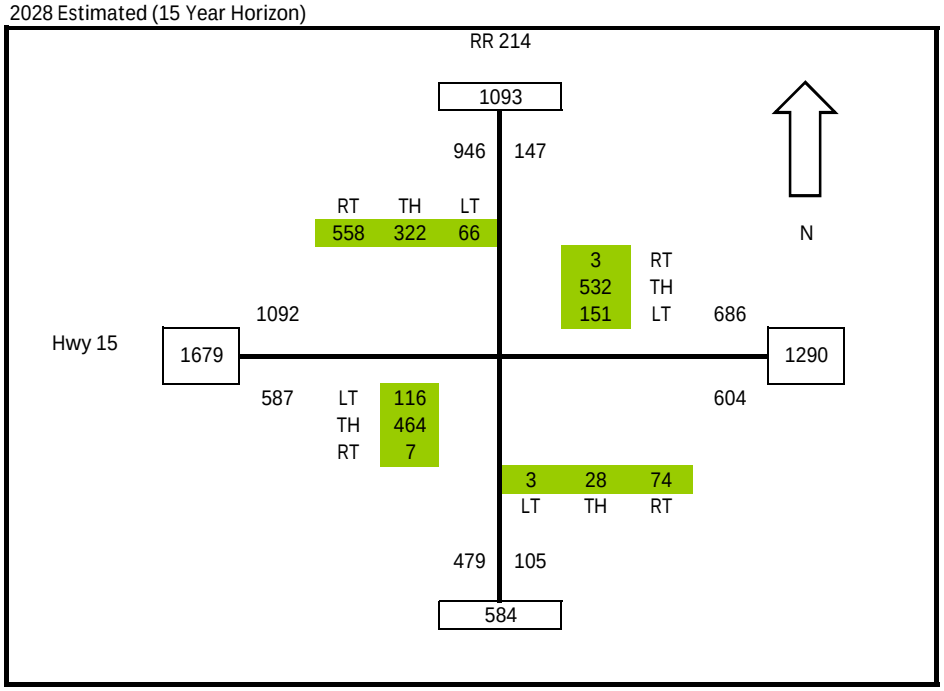

OPUS STEWART WEIR

Modified Background Traffic (PM PEAK)

Linear Growth Rate = 2%

2033 Estimated (20 Year Horizon)

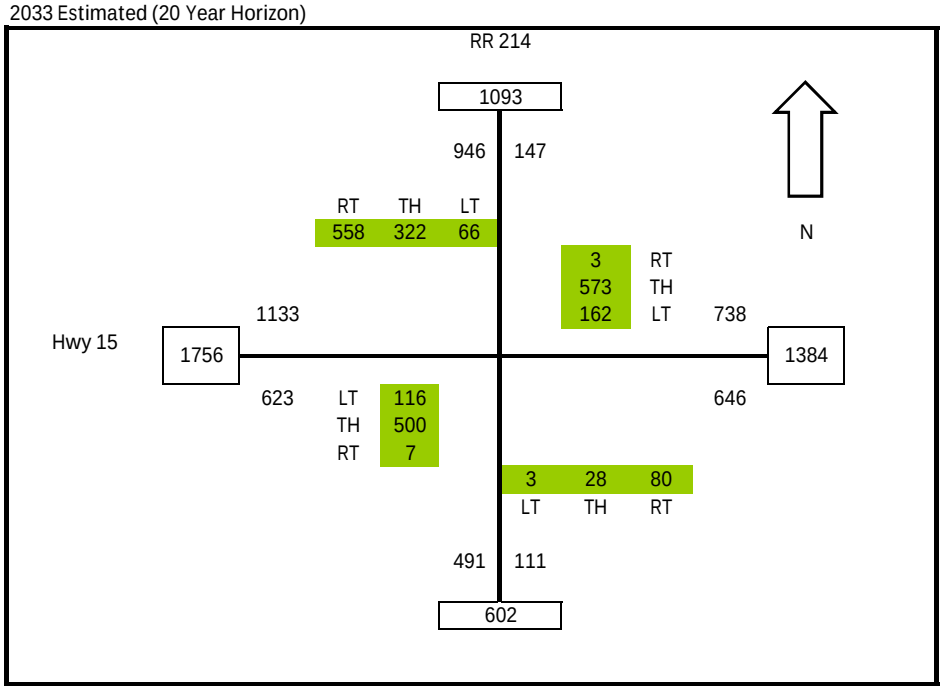

2038 Estimated (25 Year Horizon)

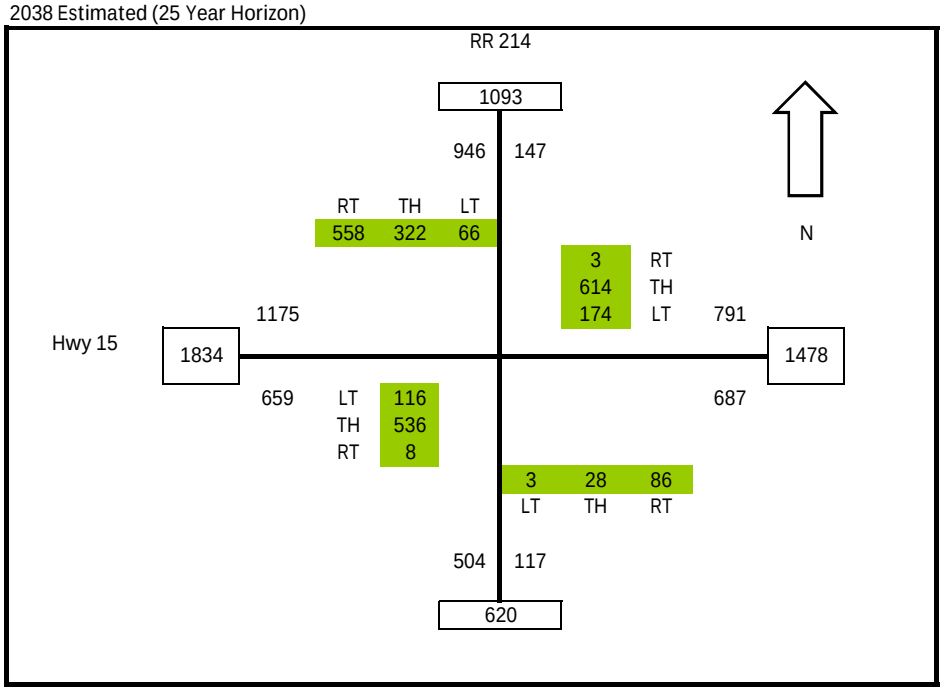

Site Generated Traffic (AM PEAK)

2013 Existing (Base Year)

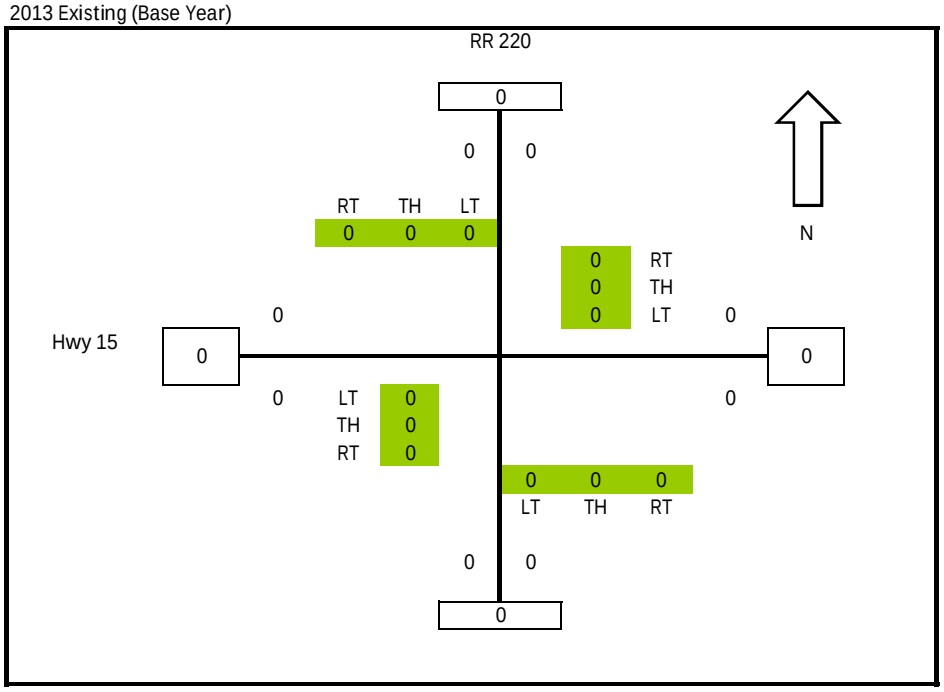

2018 Estimated

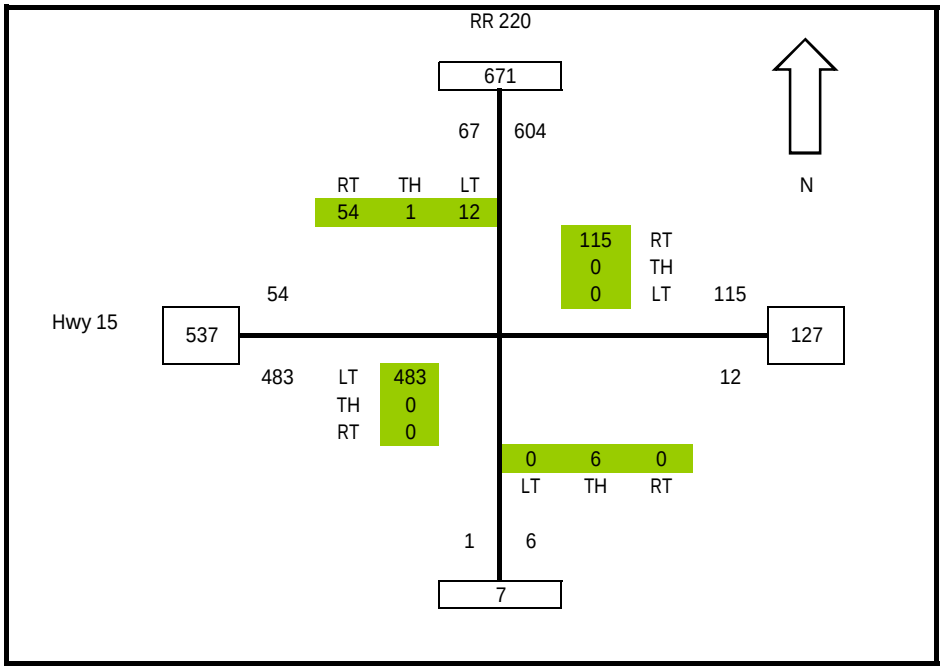

Site Generated Traffic (AM PEAK)

2023 Estimated

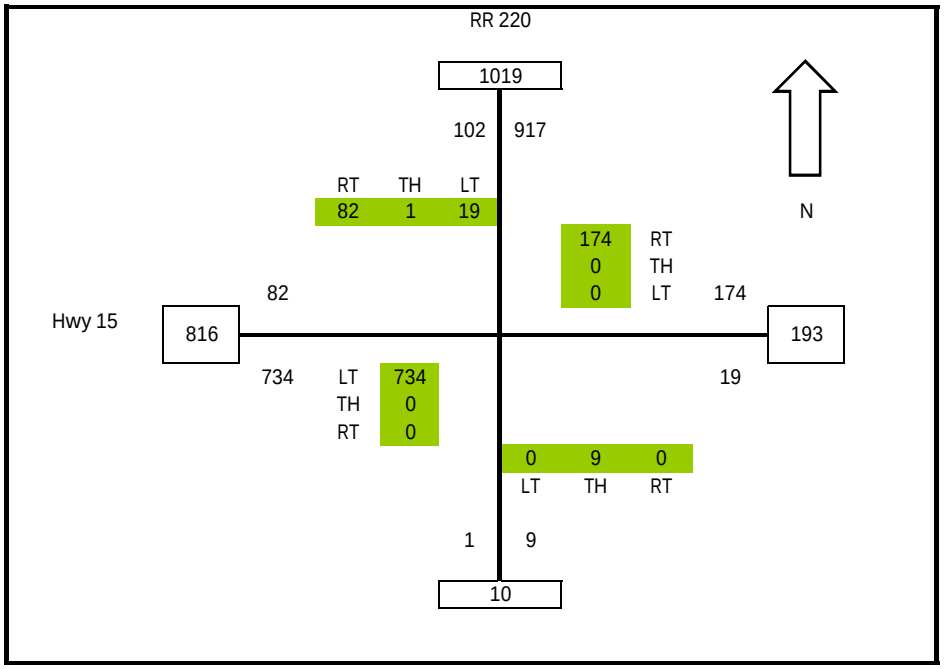

2028 Estimated

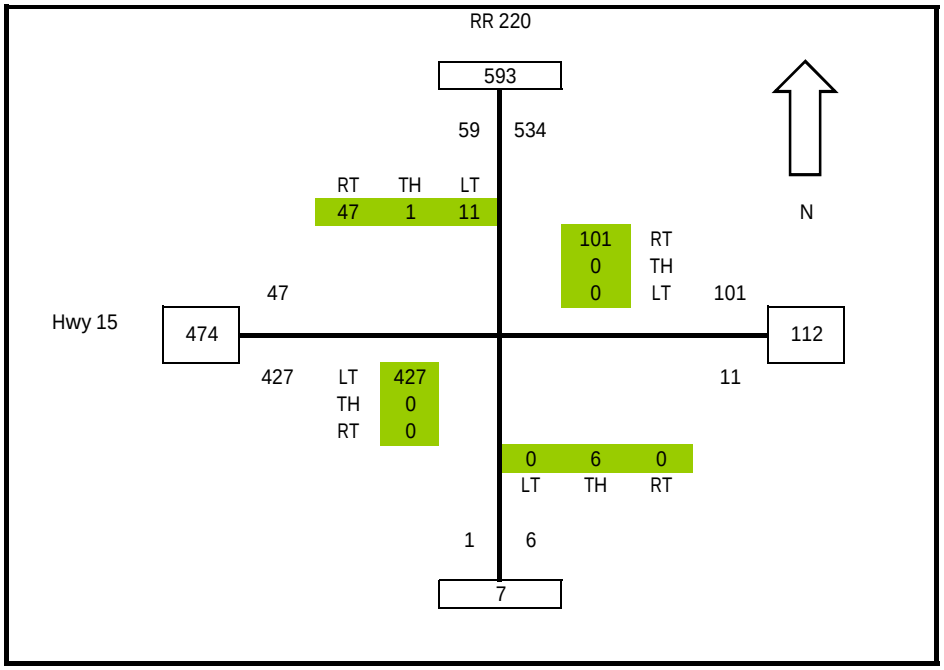

2033 Estimated

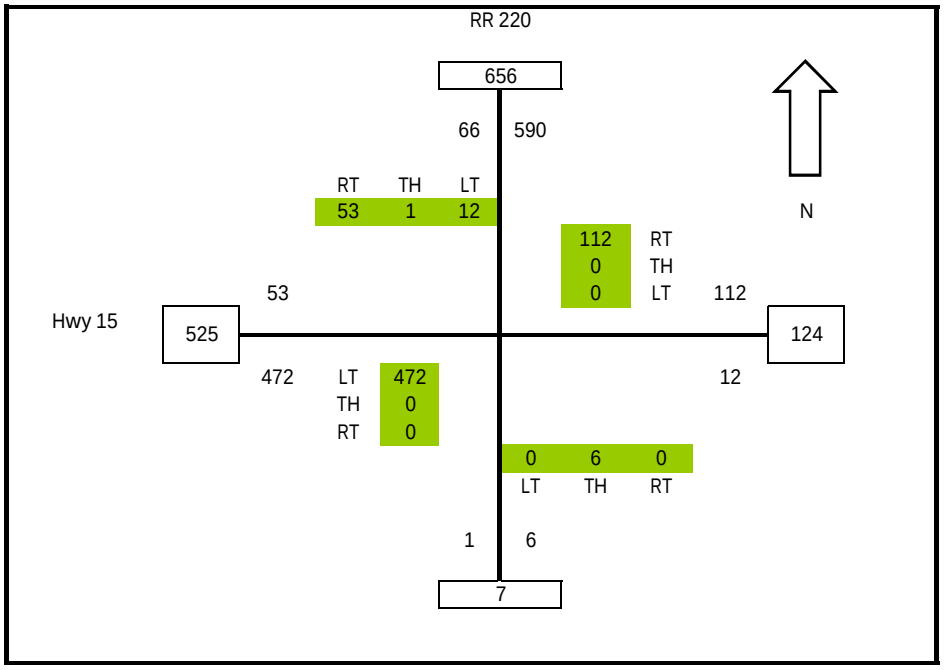

2038 Estimated

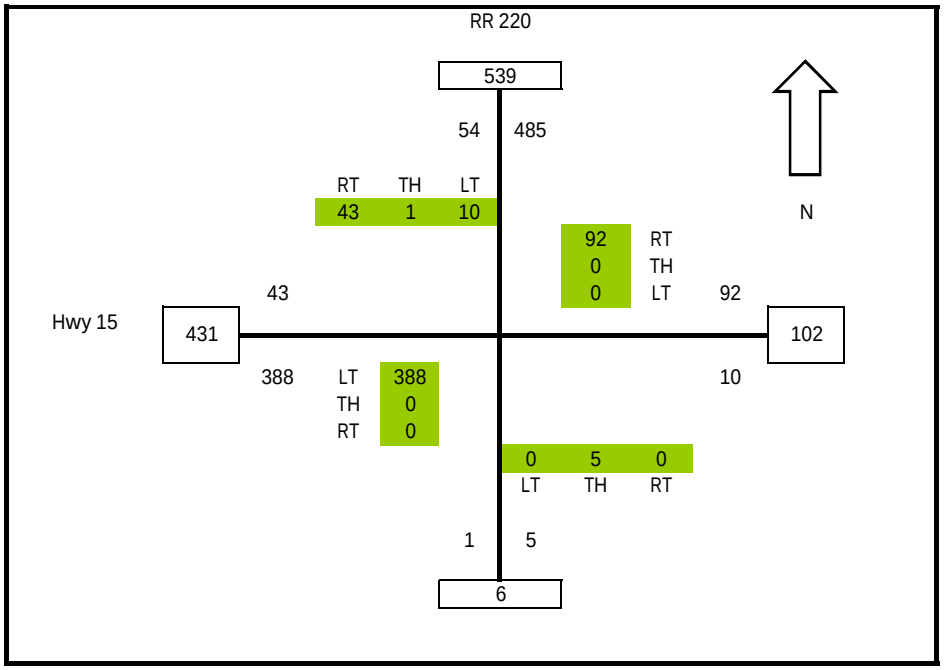

OPUS STEWART WEIR

Site Generated Traffic (AM PEAK)

2013 Existing (Base Year)

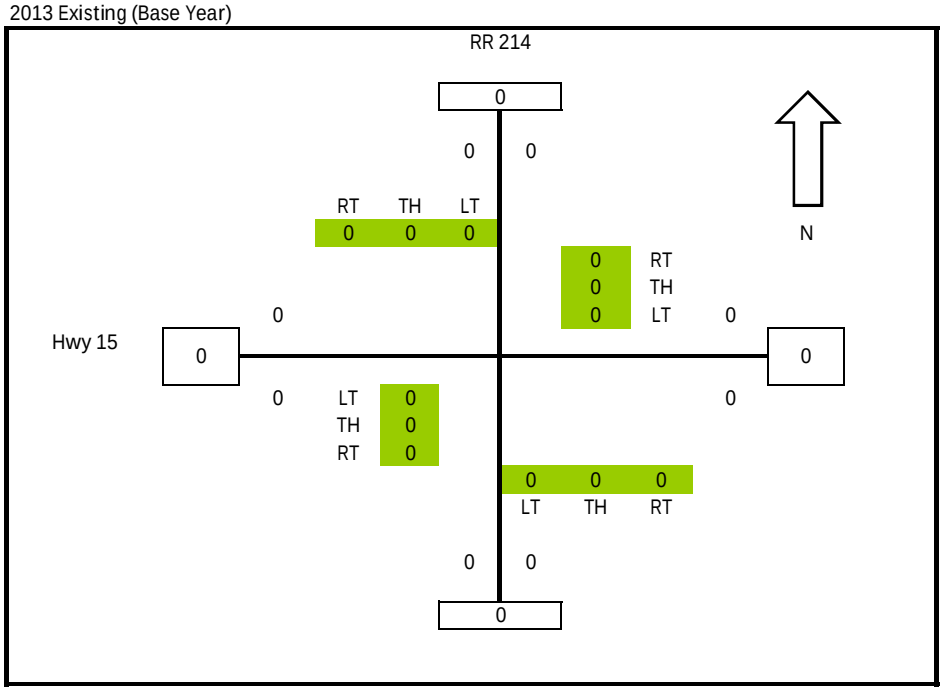

2018 Estimated

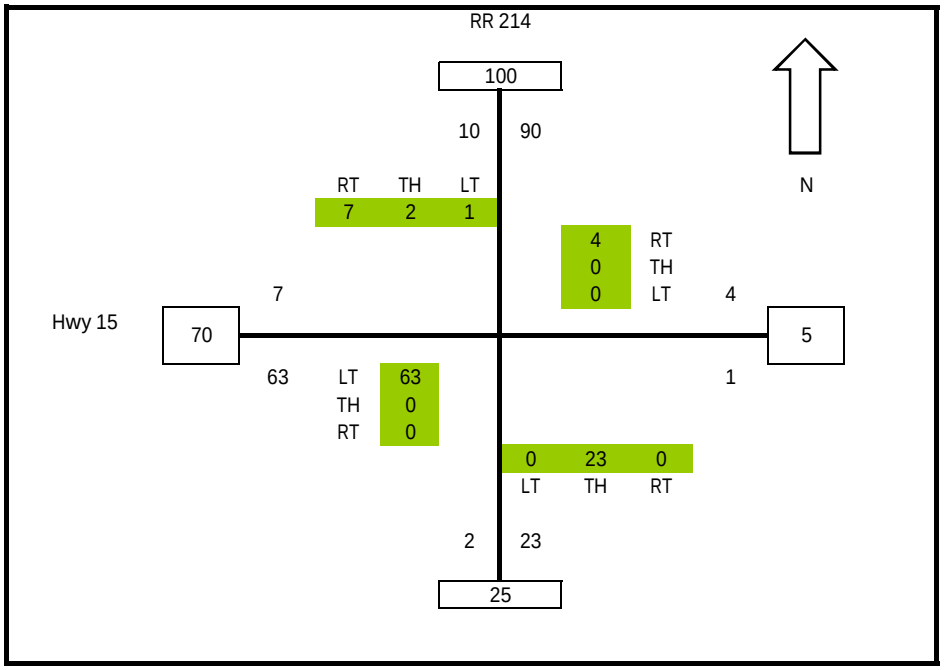

OPUS STEWART WEIR

Site Generated Traffic (AM PEAK)

2023 Estimated

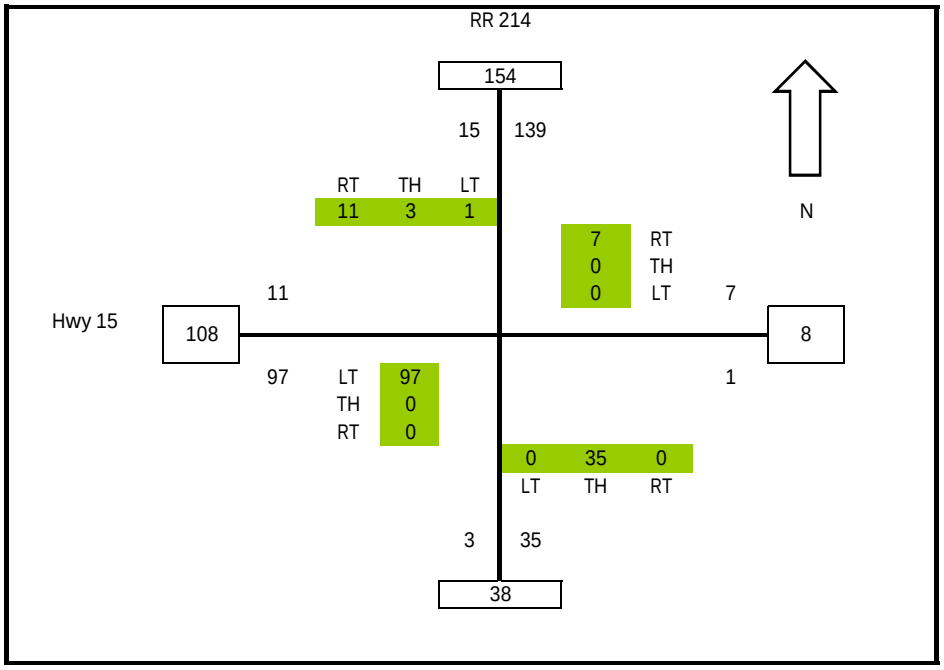

2028 Estimated

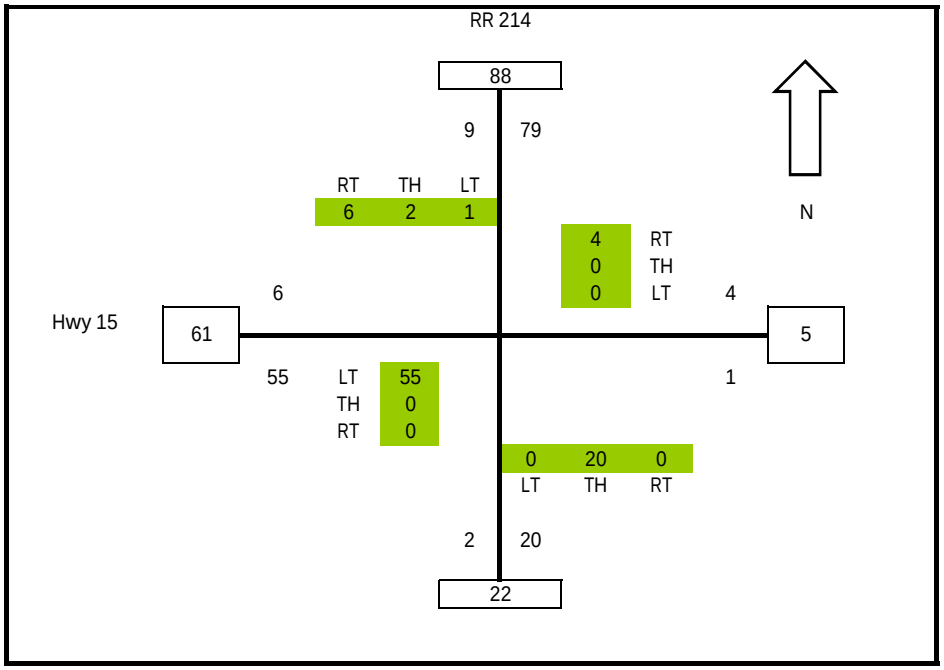

OPUS STEWART WEIR

Site Generated Traffic (AM PEAK)

2033 Estimated

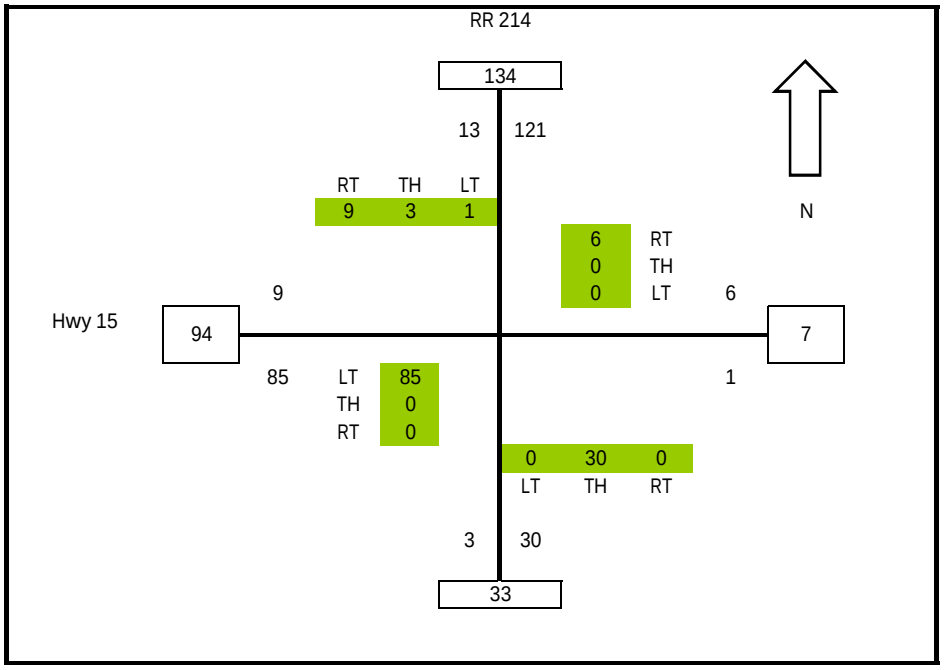

2038 Estimated

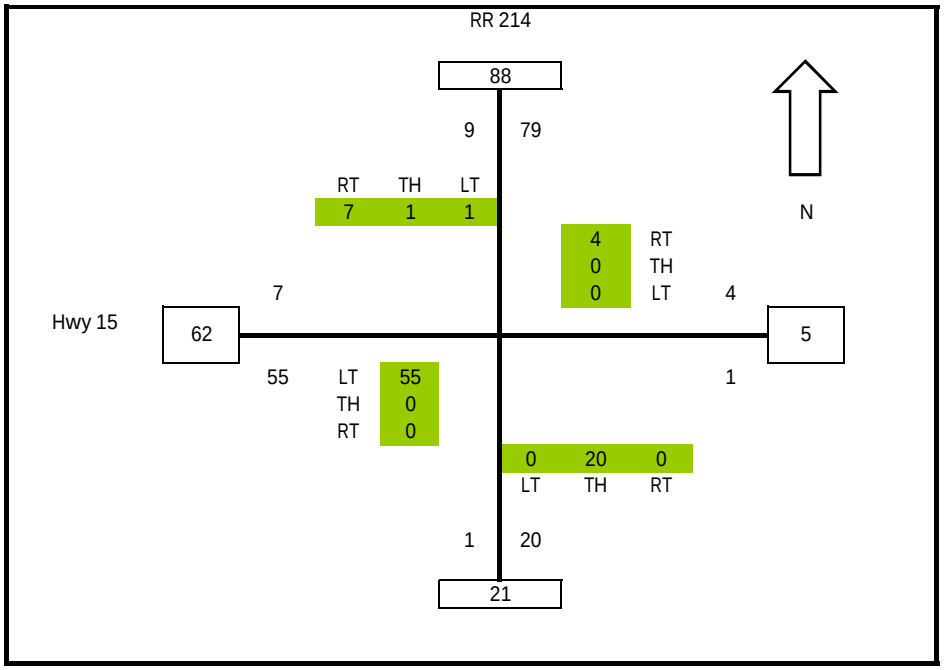

Site Generated Traffic (PM PEAK)

2013 Existing (Base Year)

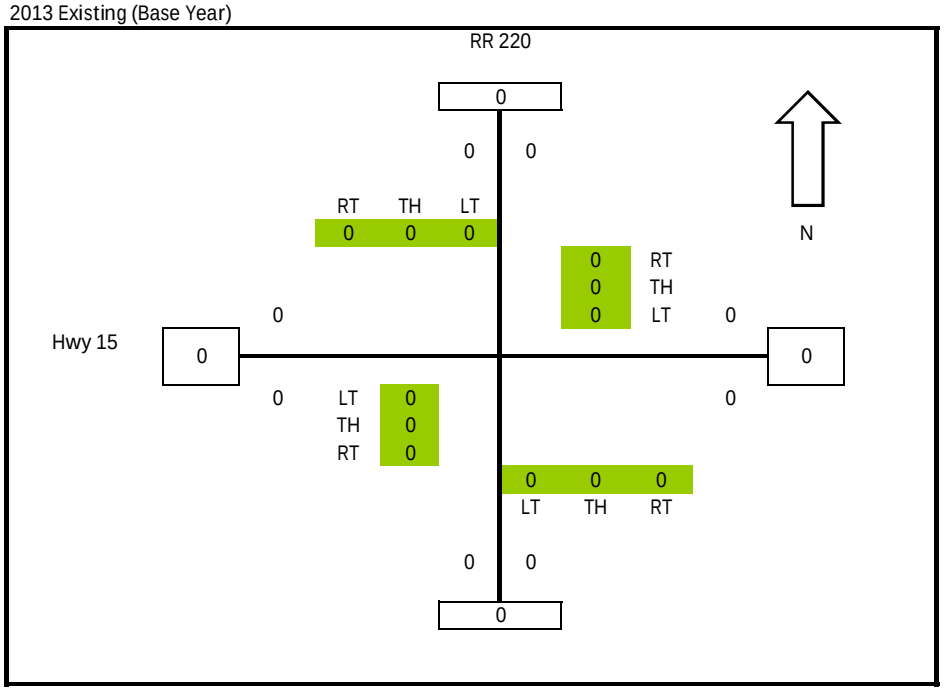

2018 Estimated

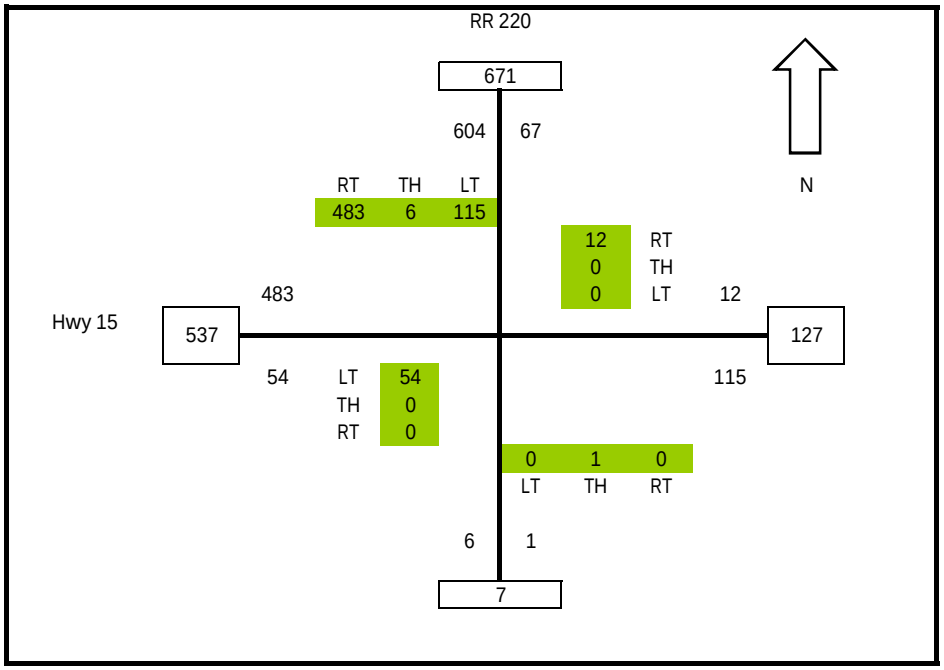

OPUS STEWART WEIR

Site Generated Traffic (PM PEAK)

2023 Estimated

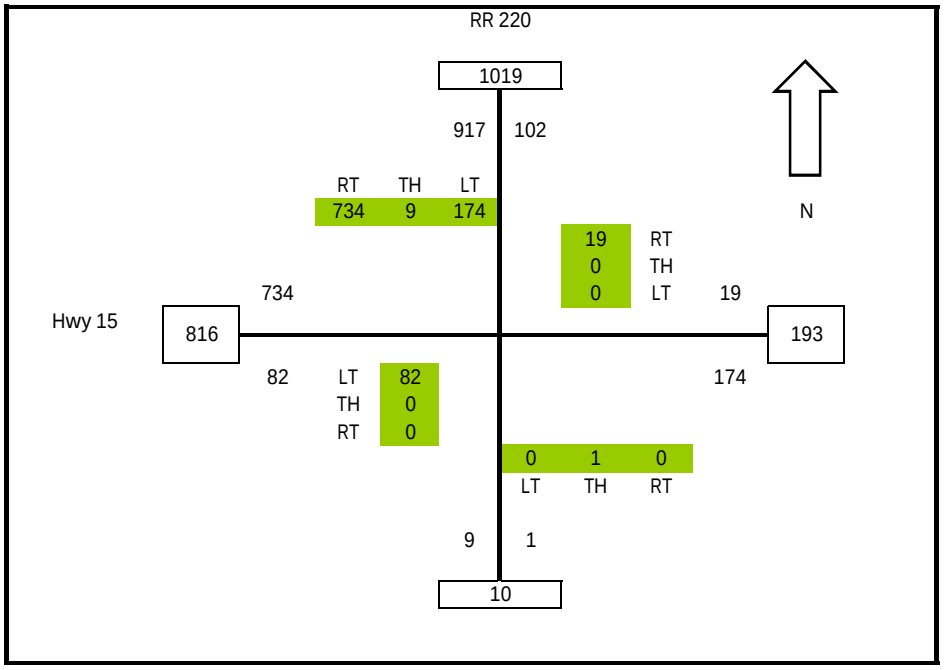

2028 Estimated

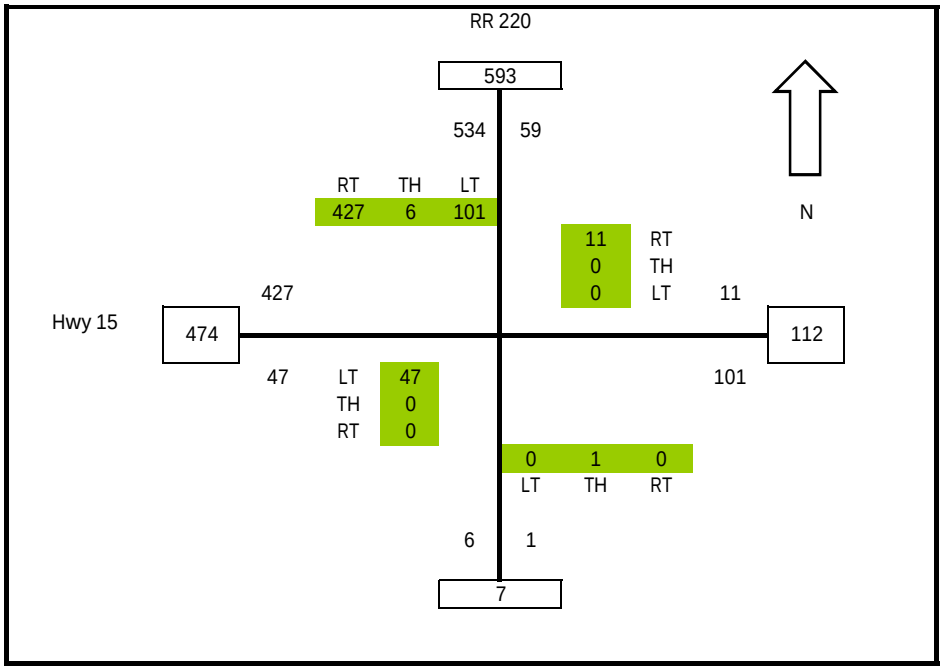

2033 Estimated

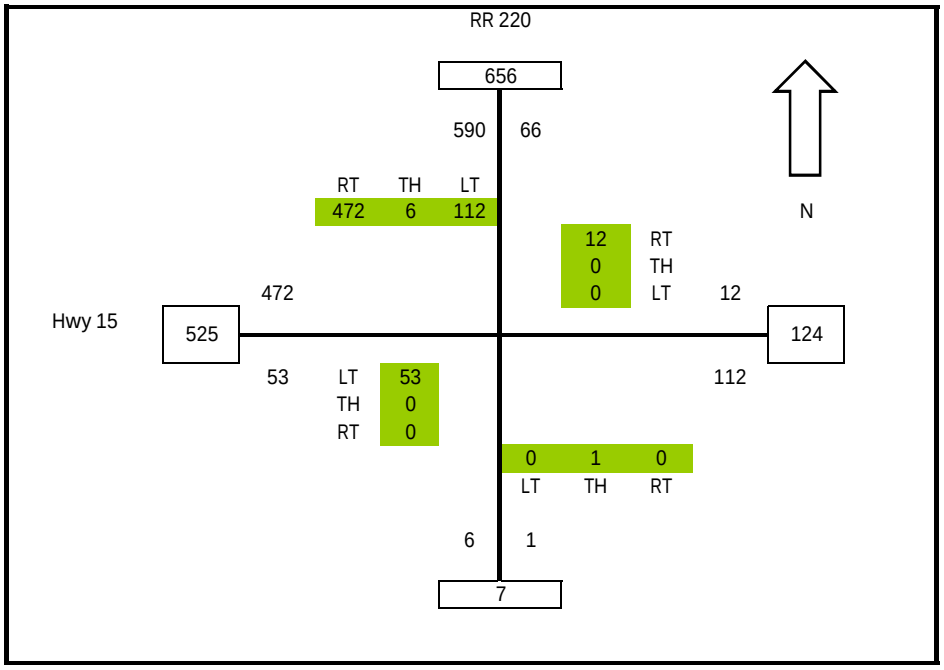

2038 Estimated

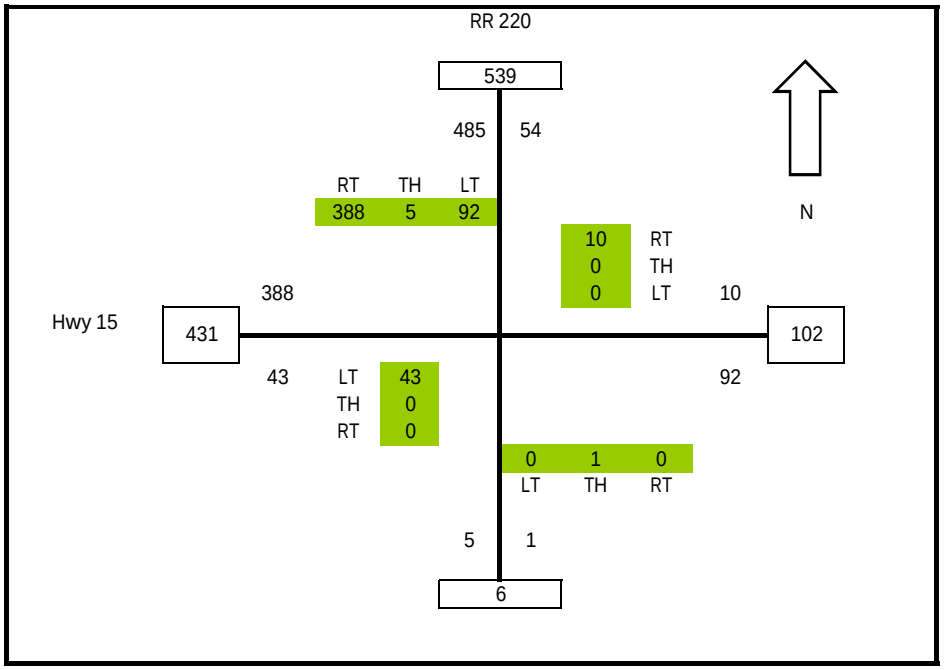

Site Generated Traffic (PM PEAK)

2013 Existing (Base Year)

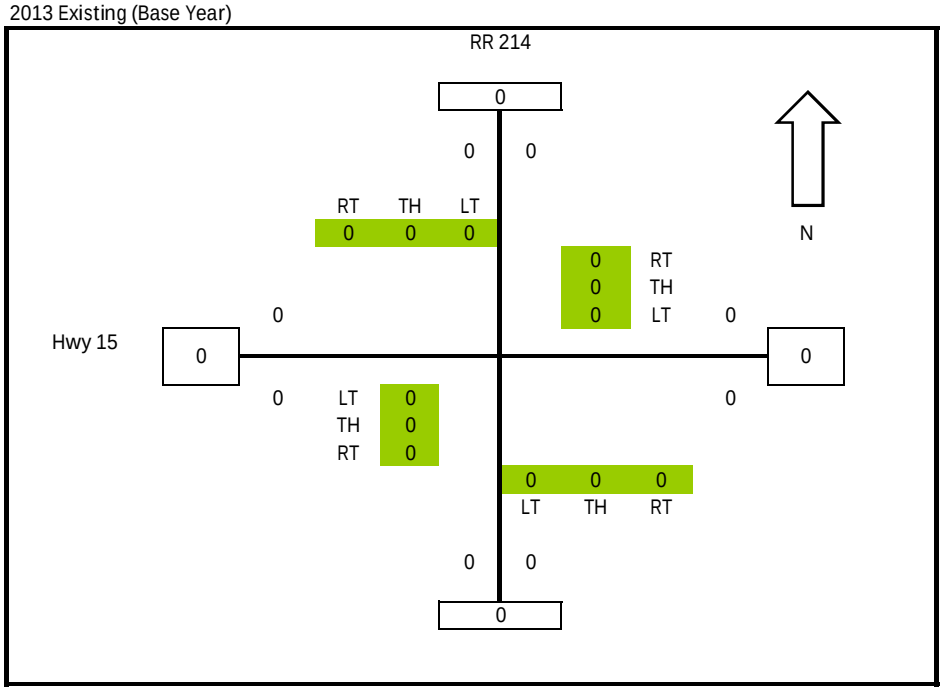

2018 Estimated

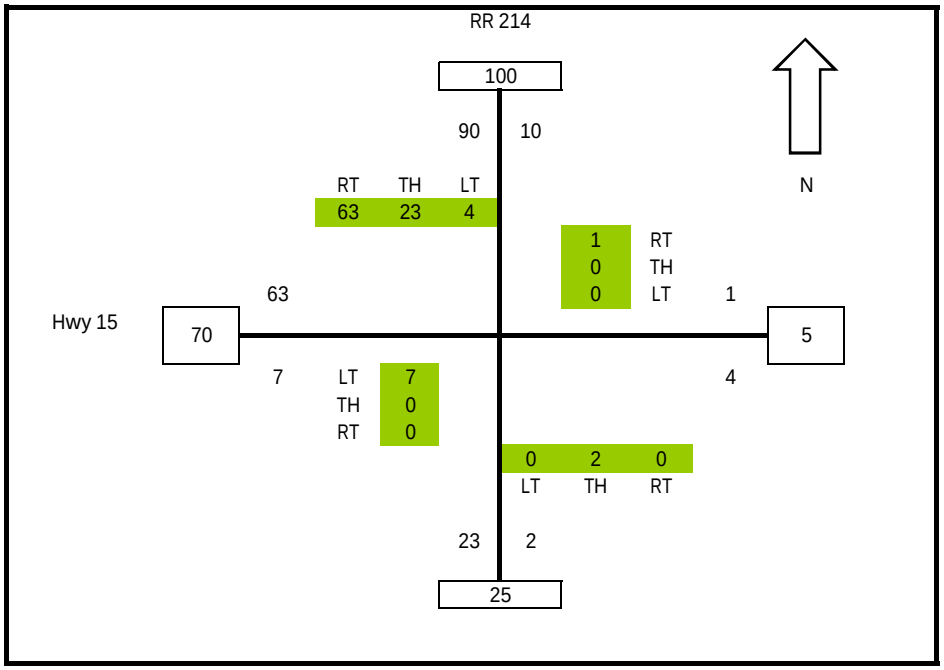

Site Generated Traffic (PM PEAK)

2023 Estimated

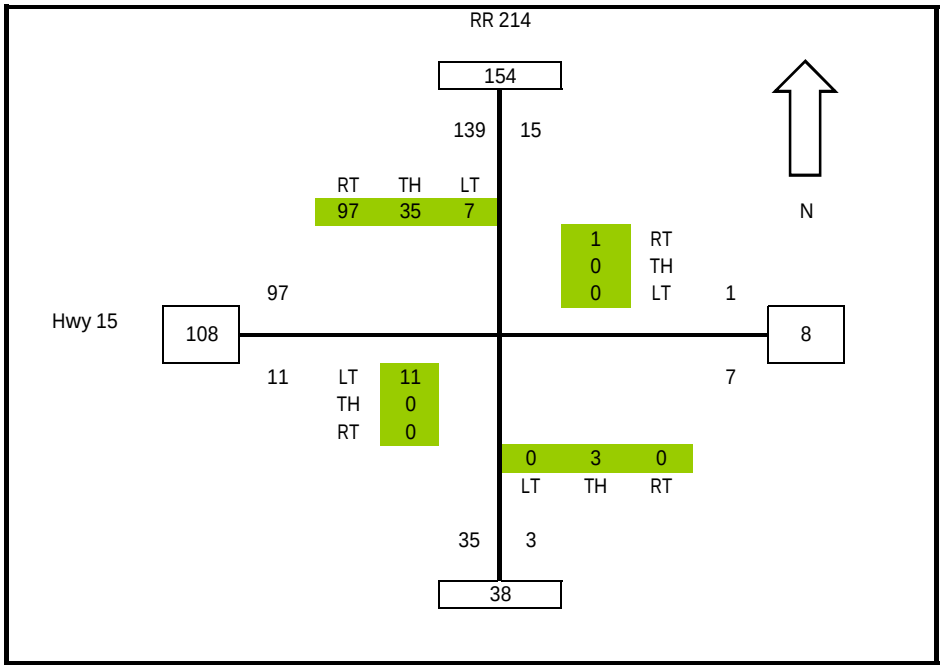

2028 Estimated

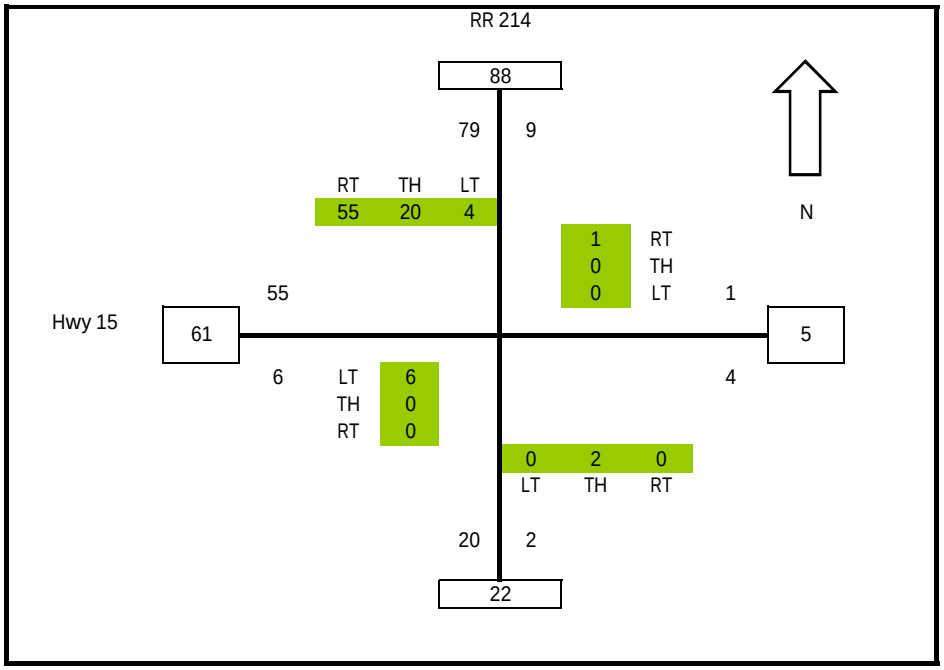

OPUS STEWART WEIR

Site Generated Traffic (PM PEAK)

2033 Estimated

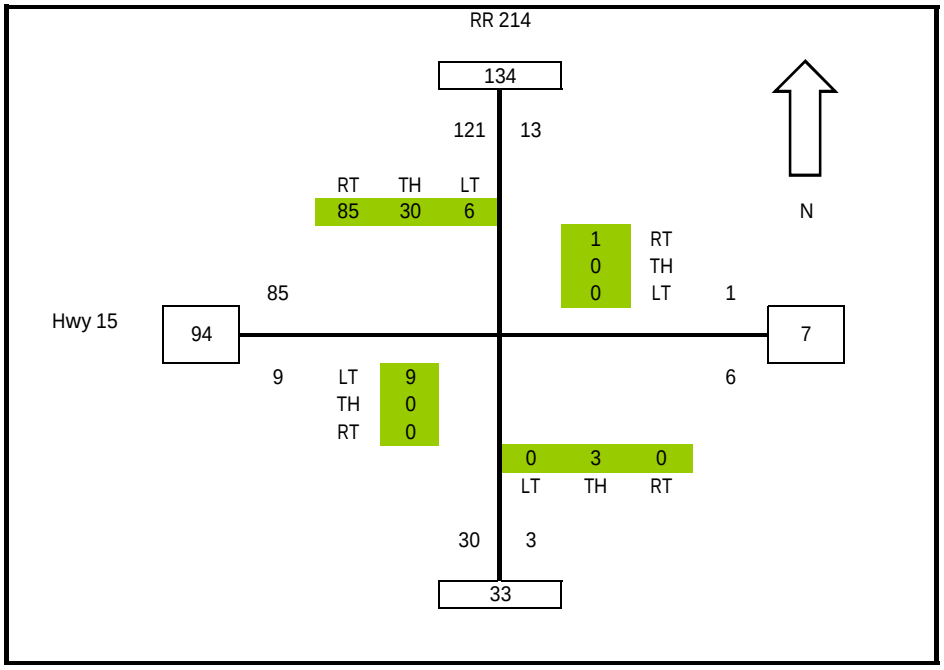

2038 Estimated

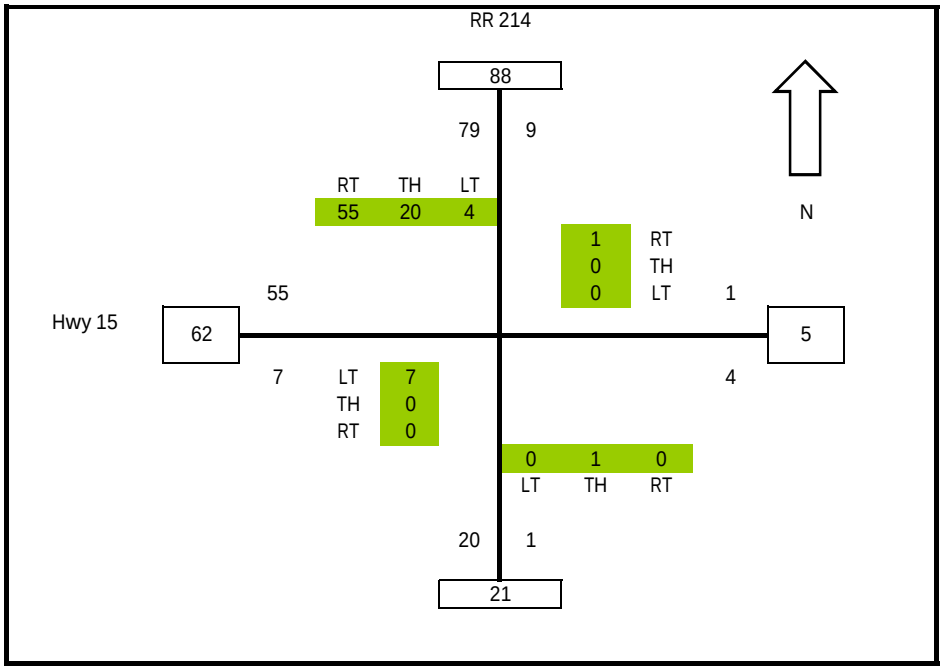

OPUS STEWART WEIR

Combined Traffic (AM PEAK)

2013 Existing (Base Year)

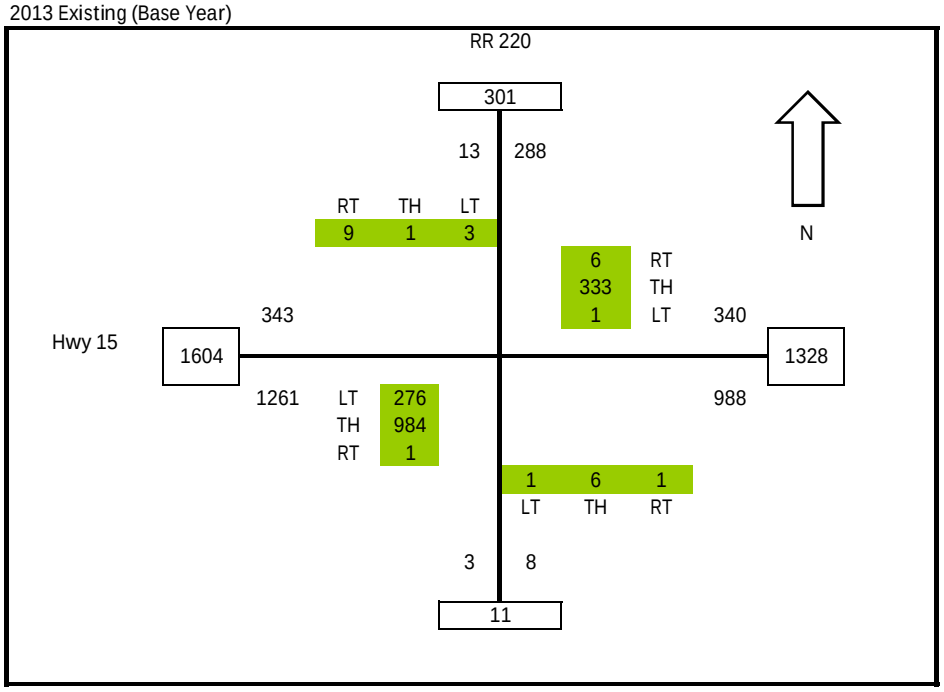

2018 Estimated

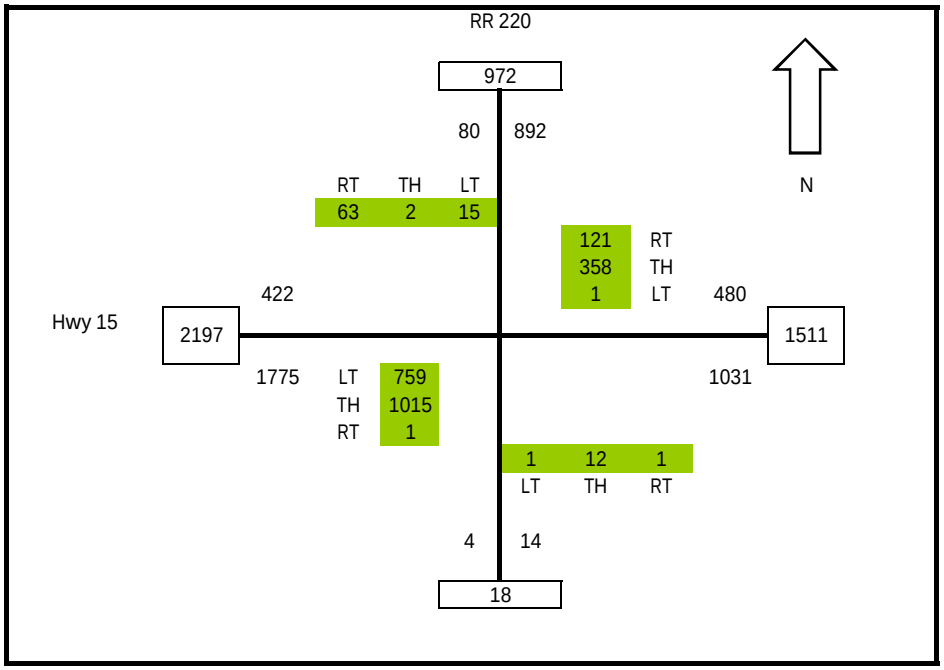

OPUS STEWART WEIR

Combined Traffic (AM PEAK)

2023 Estimated

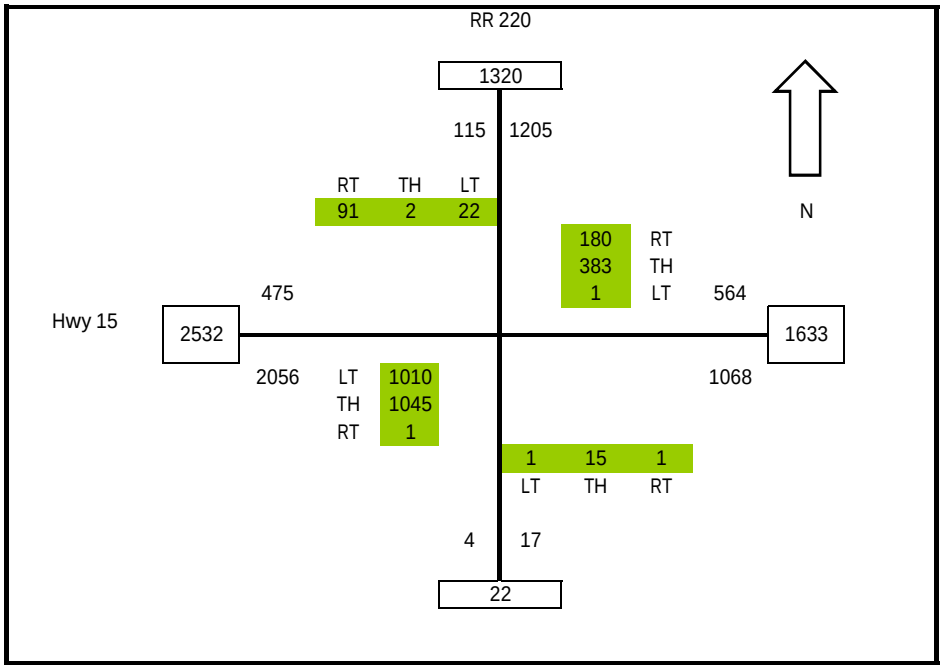

2028 Estimated

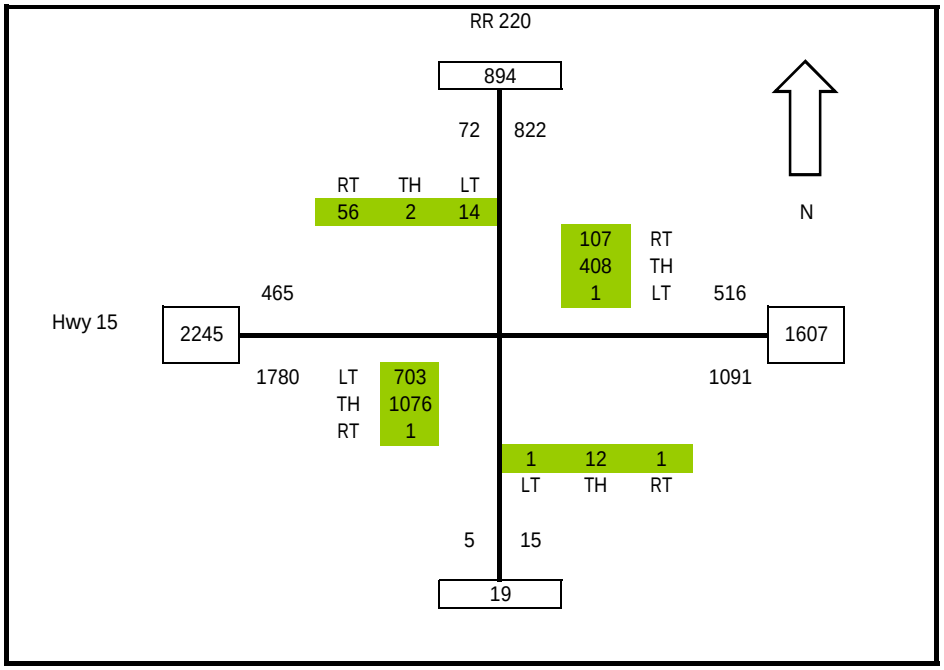

OPUS STEWART WEIR

Combined Traffic (AM PEAK)

2033 Estimated

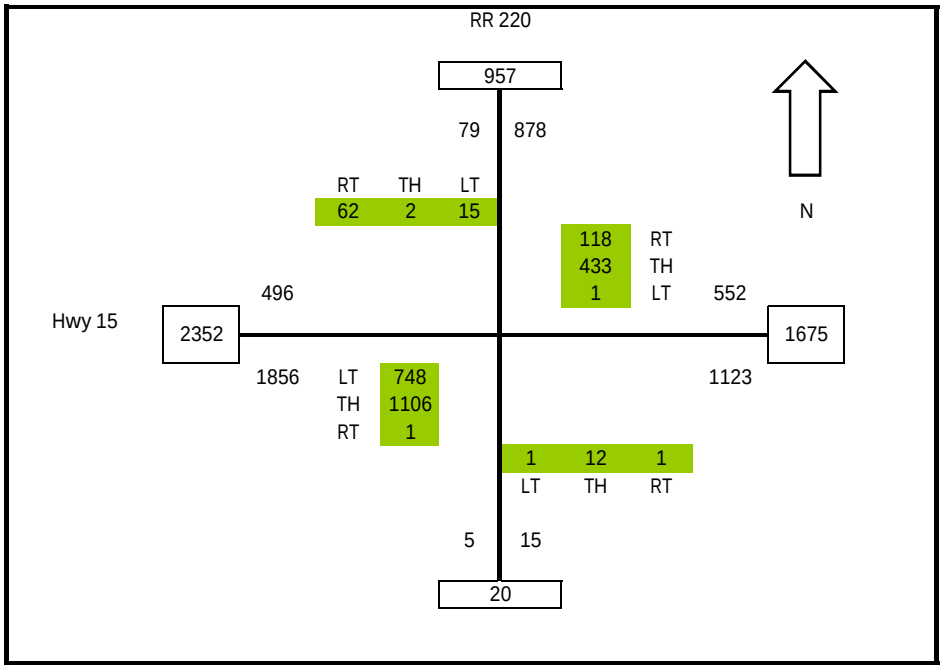

2038 Estimated

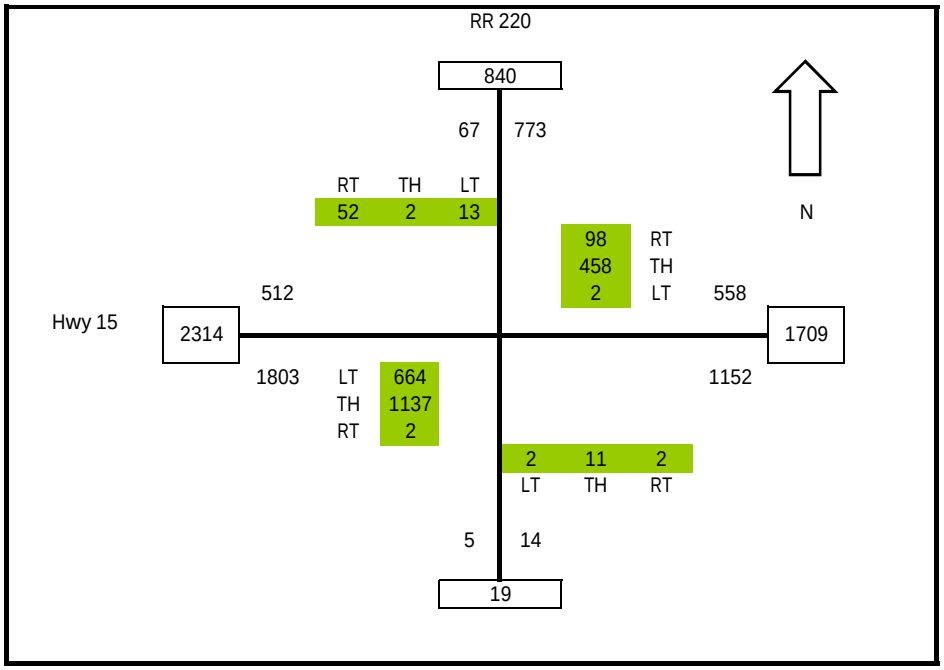

OPUS STEWART WEIR

Combined Traffic (AM PEAK)

2013 Existing (Base Year)

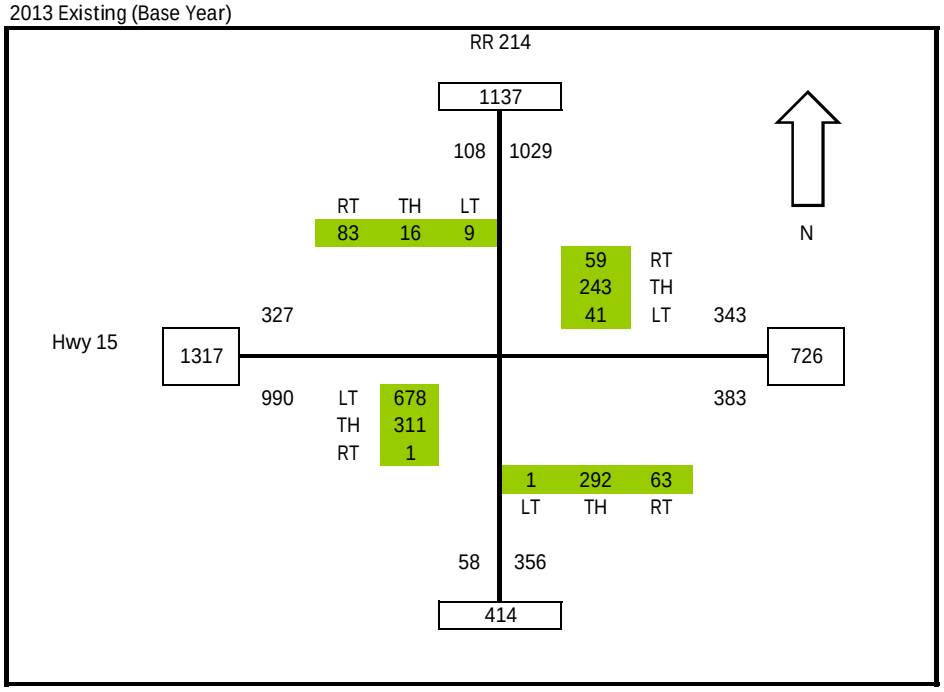

2018 Estimated

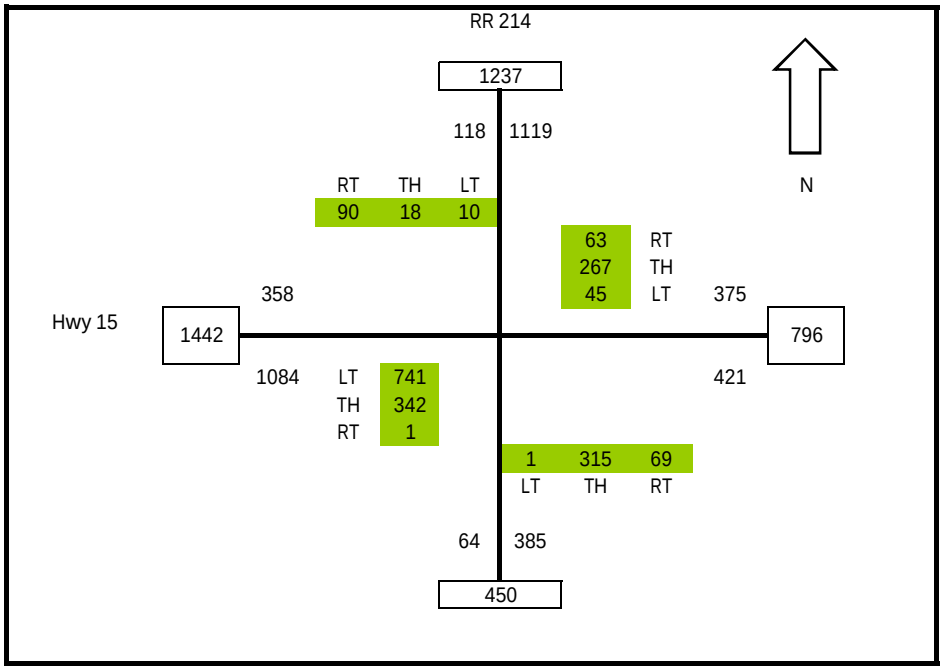

OPUS STEWART WEIR

Combined Traffic (AM PEAK)

2023 Estimated

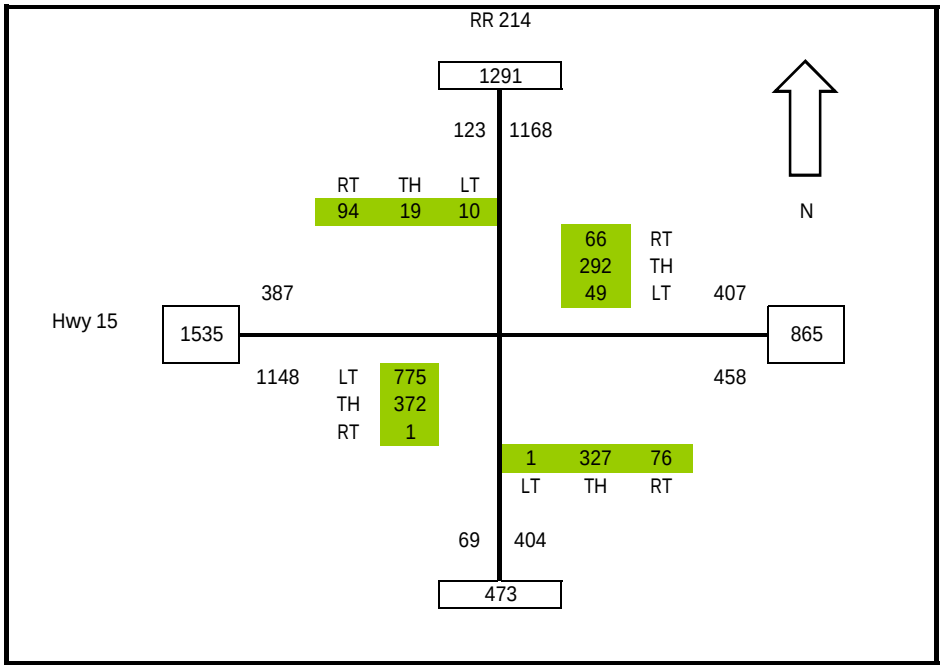

2028 Estimated

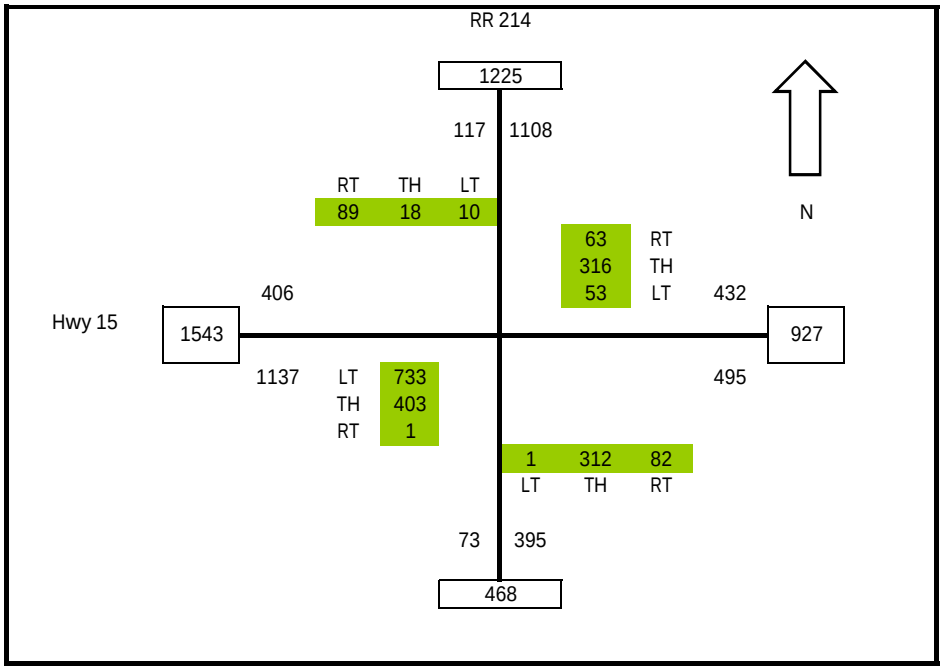

OPUS STEWART WEIR

Combined Traffic (AM PEAK)

2033 Estimated

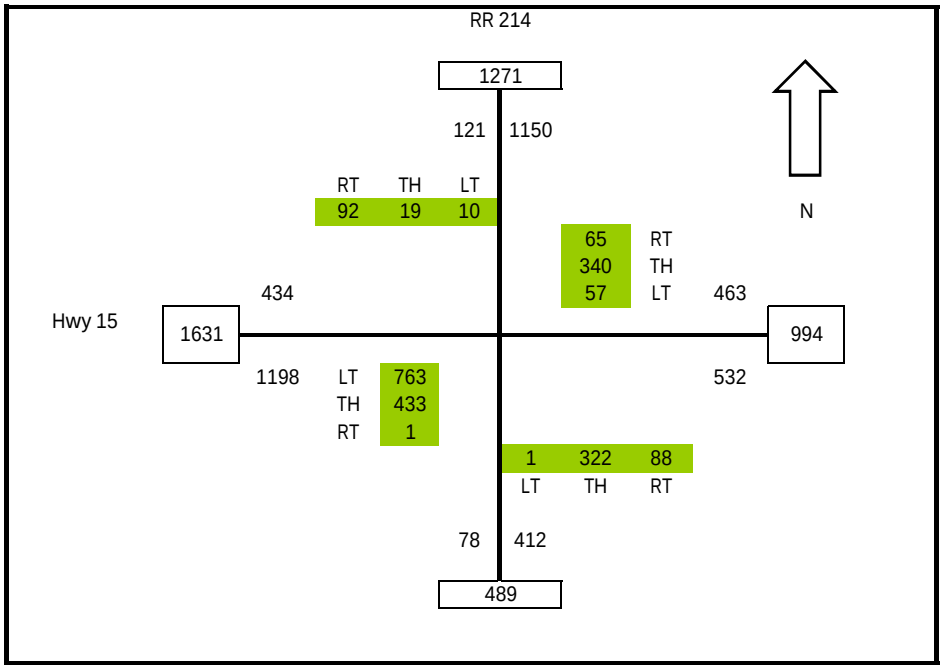

2038 Estimated

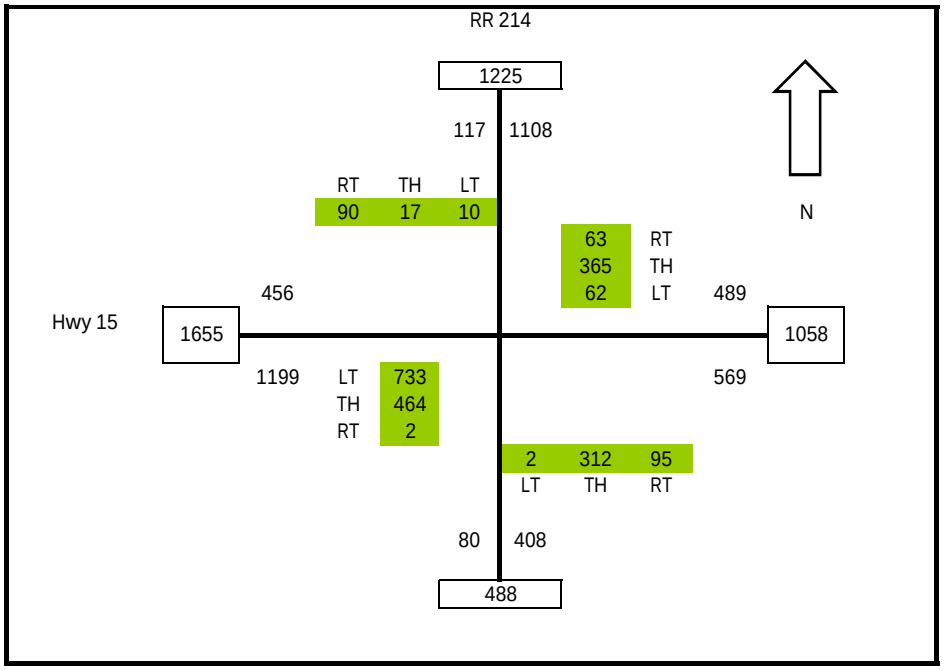

OPUS STEWART WEIR

Combined Traffic (PM PEAK)

2013 Existing (Base Year)

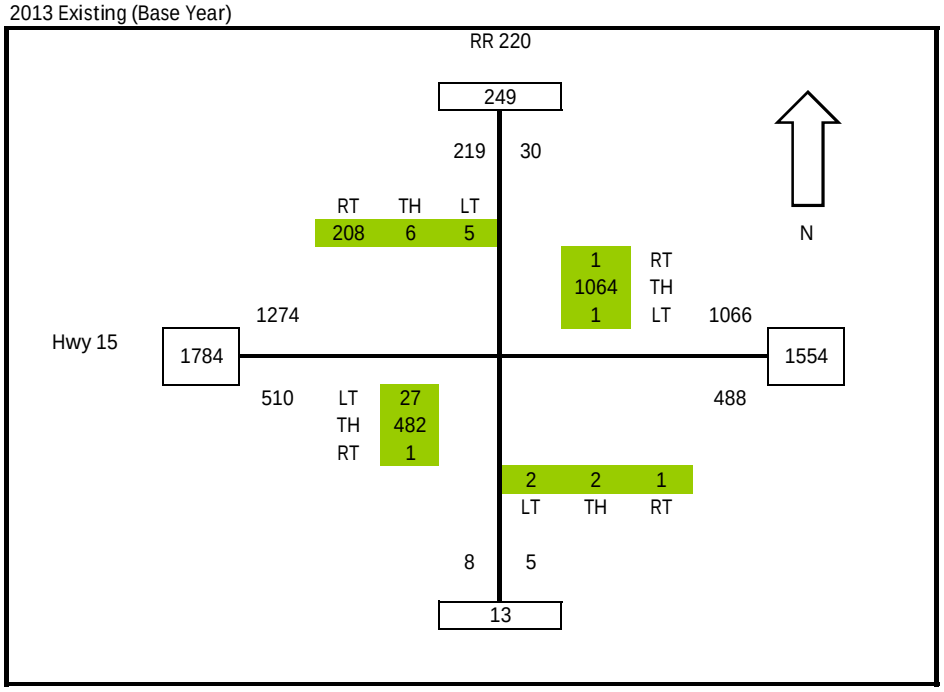

2018 Estimated

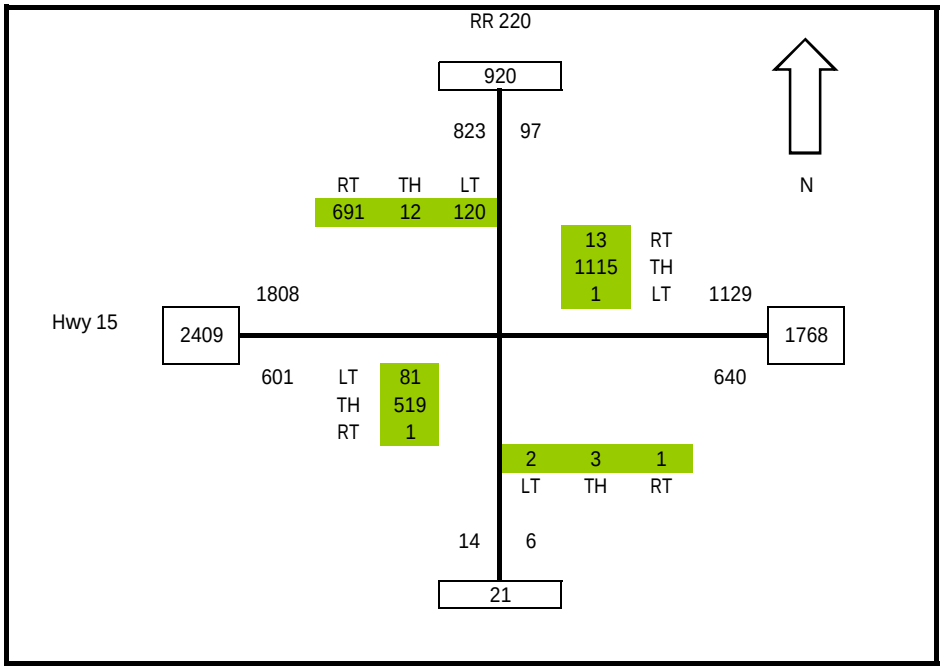

OPUS STEWART WEIR

Combined Traffic (PM PEAK)

2023 Estimated

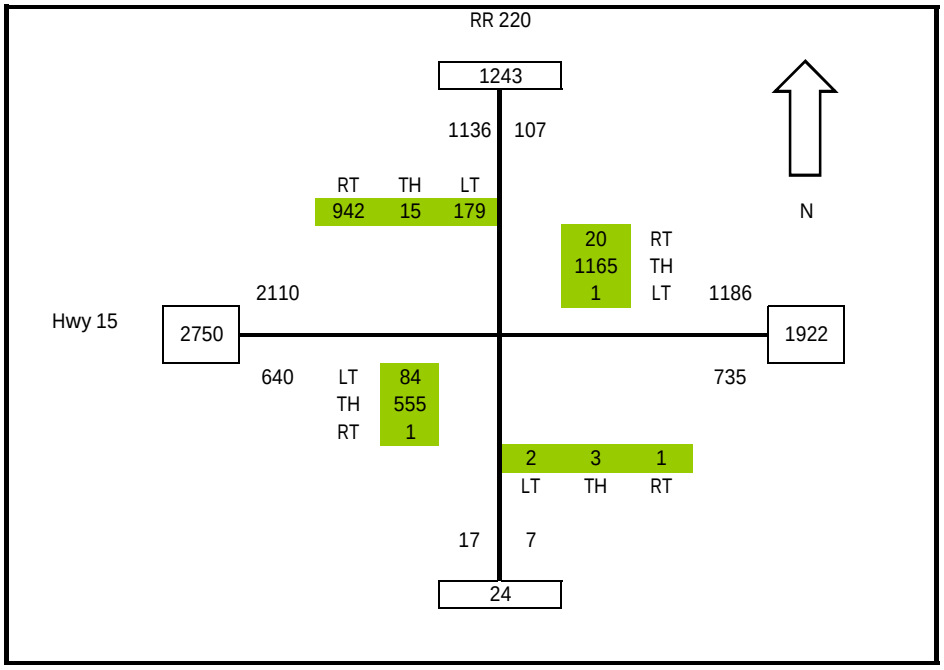

2028 Estimated

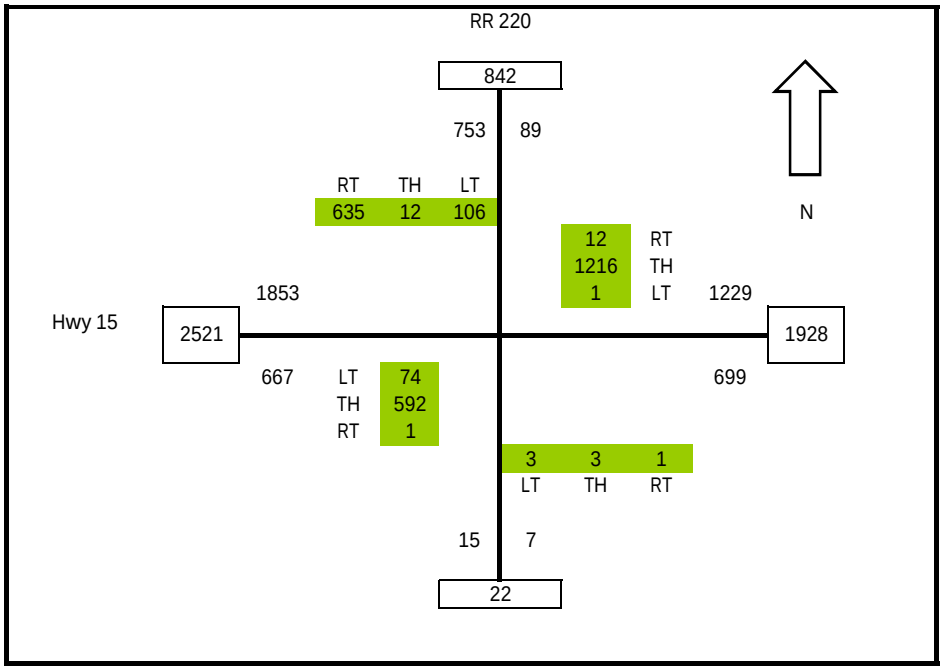

OPUS STEWART WEIR

Combined Traffic (PM PEAK)

2033 Estimated

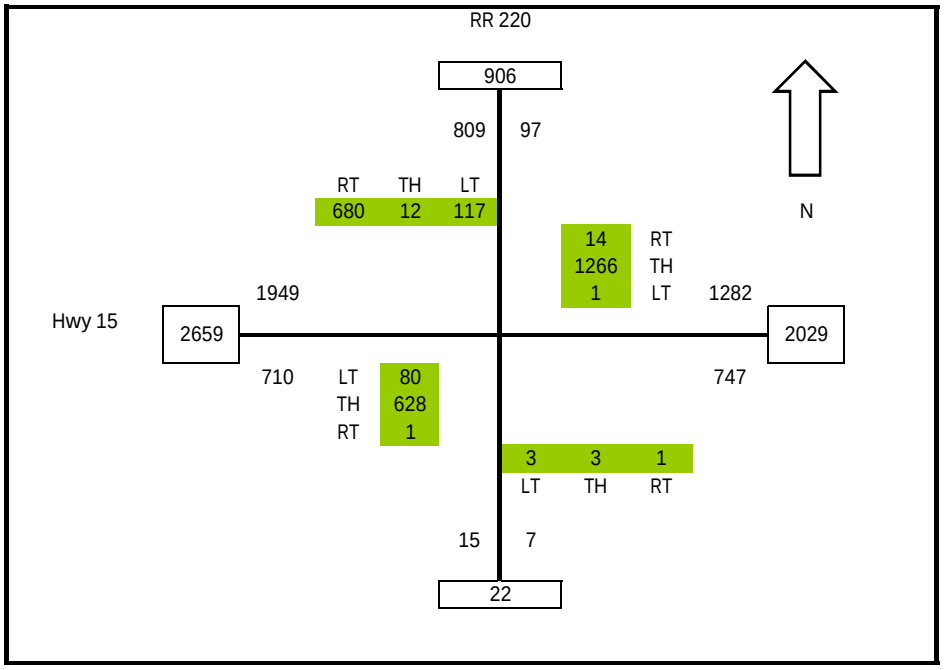

2038 Estimated

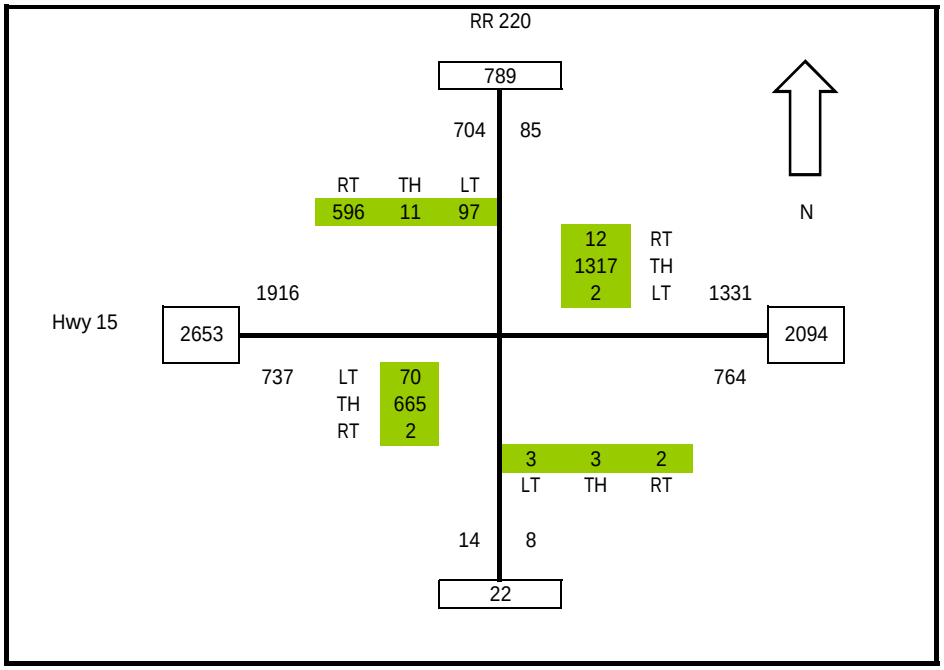

OPUS STEWART WEIR

Combined Traffic (PM PEAK)

2013 Existing (Base Year)

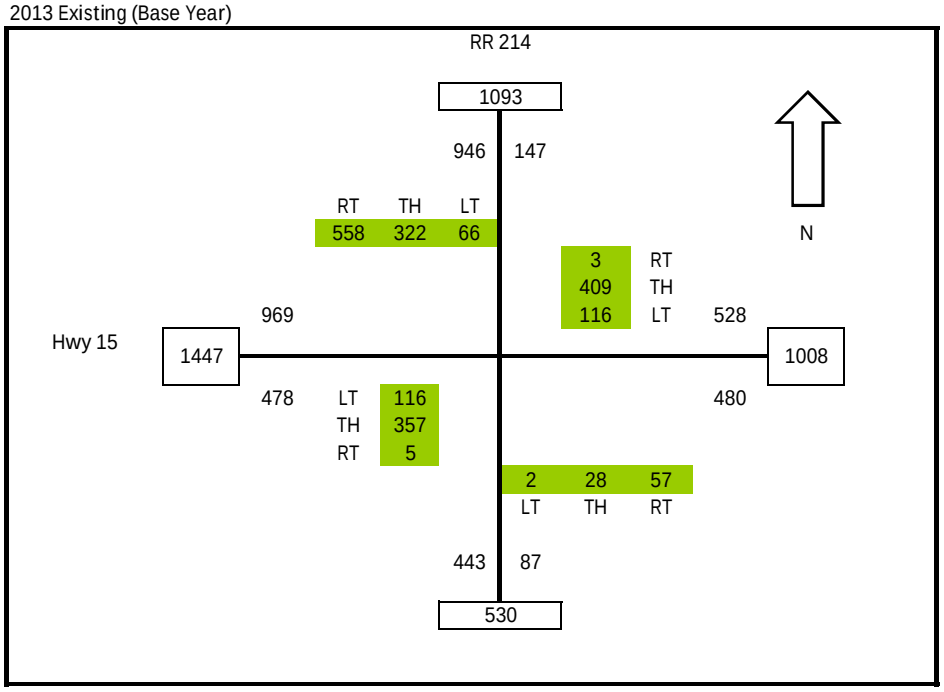

2018 Estimated

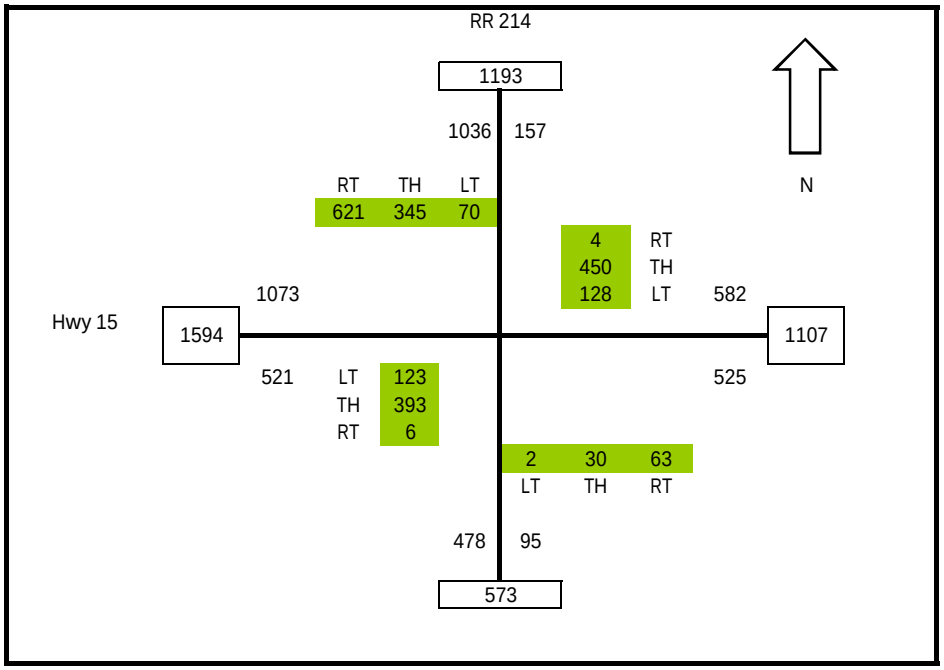

OPUS STEWART WEIR

Combined Traffic (PM PEAK)

2023 Estimated

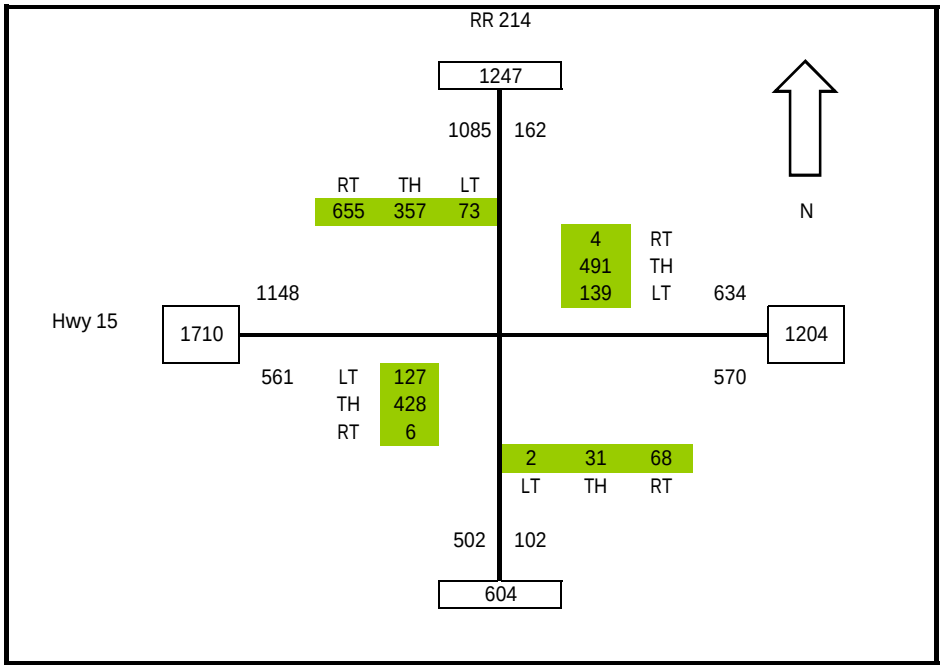

2028 Estimated

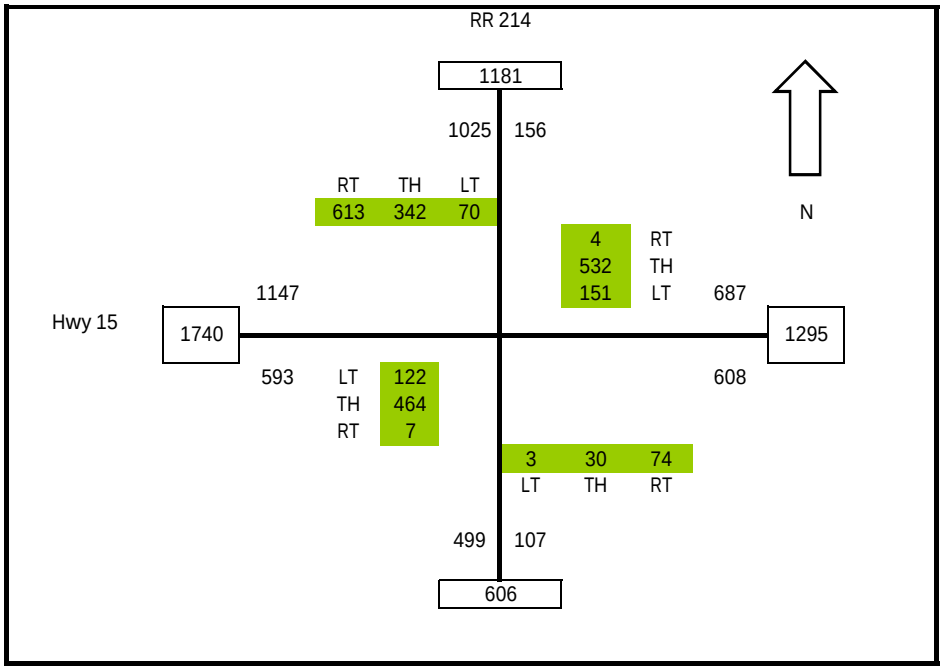

OPUS STEWART WEIR

Combined Traffic (PM PEAK)

2033 Estimated

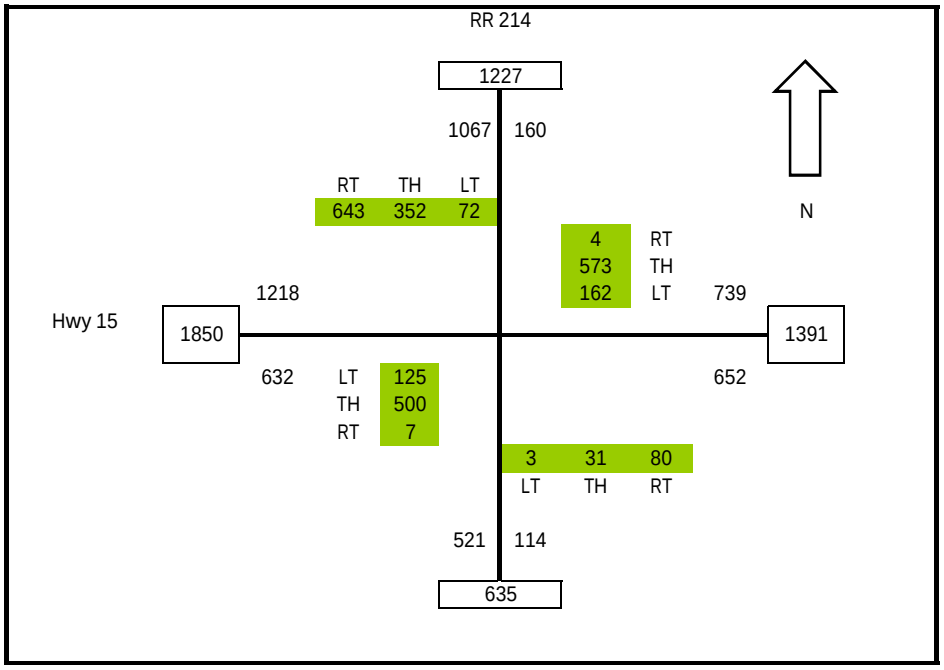

2038 Estimated

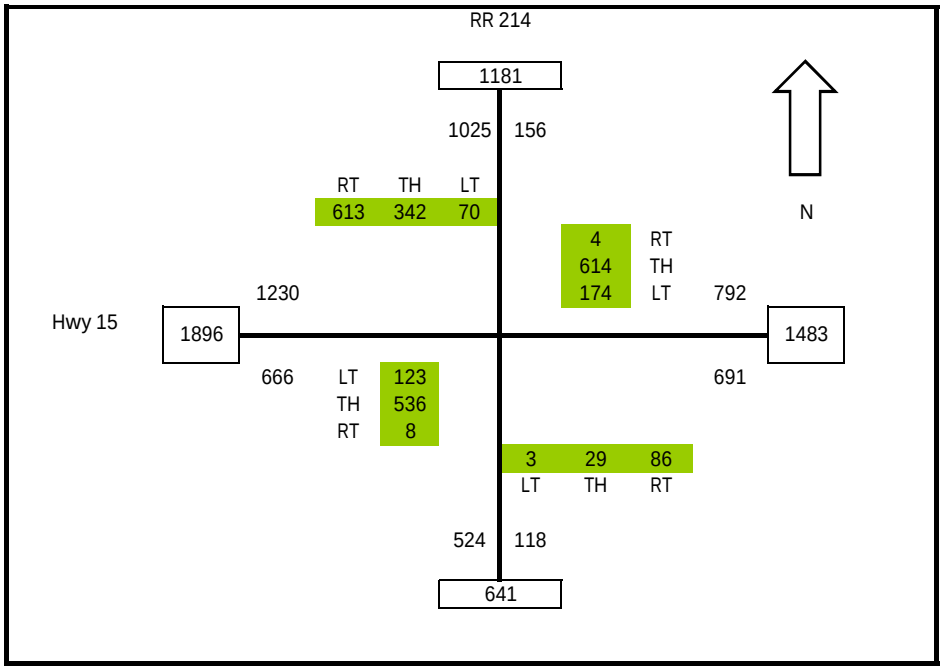

APPENDIX J

Synchro Analysis

Lane Group	EBL	EBT	EBR	WBL	WBT	WBR	NBL	NBT	NBR	SBL	SBT	SBR
Lane Configurations												
Volume (vph)	276	984	5	5	333	6	5	6	5	5	5	9
Ideal Flow (vphpl)	1900	1900	1900	1900	1900	1900	1900	1900	1900	1900	1900	1900
Lane Width (m)	3.5	3.7	3.5	3.5	3.7	3.5	4.0	4.0	4.0	3.5	3.5	3.7
Storage Length (m)	0.0		87.5	200.0		0.0	0.0		0.0	0.0		60.0
Storage Lanes	2		1	1		1	0		0	0		1
Taper Length (m)	50.0			30.0			30.0			30.0		
Lane Util. Factor	0.97	0.95	1.00	1.00	0.95	1.00	1.00	1.00	1.00	1.00	1.00	0.88
Frt			0.850			0.850		0.957				0.850
Flt Protected	0.950			0.950				0.984			0.976	
Satd. Flow (prot)	3148	3318	1452	1623	3318	1452	0	1699	0	0	1667	2613
Flt Permitted	0.950			0.950				0.914			0.869	
Satd. Flow (perm)	3148	3318	1452	1623	3318	1452	0	1578	0	0	1484	2613
Right Turn on Red			Yes			No			Yes			Yes
Satd. Flow (RTOR)			164					6				273
Link Speed (k/h)		100			100			80			80	
Link Distance (m)		239.4			250.6			200.1			259.6	
Travel Time (s)		8.6			9.0			9.0			11.7	
Peak Hour Factor	0.85	0.85	0.85	0.85	0.85	0.85	0.85	0.85	0.85	0.85	0.85	0.85
Adj. Flow (vph)	325	1158	6	6	392	7	6	7	6	6	6	11
Shared Lane Traffic (%)												
Lane Group Flow (vph)	325	1158	6	6	392	7	0	19	0	0	12	11
Turn Type	Prot	NA	Perm	Prot	NA	custom	Perm	NA		Perm	NA	Free
Protected Phases	5	2		1				8			4	
Permitted Phases			2		6	6	8			4		Free
Detector Phase	5	2	2	1	6	6	8	8		4	4	
Switch Phase												
Minimum Initial (s)	10.0	15.0	15.0	10.0	15.0	15.0	10.0	10.0		10.0	10.0	
Minimum Split (s)	16.0	21.0	21.0	16.0	21.0	21.0	16.0	16.0		16.0	16.0	
Total Split (s)	17.0	27.0	27.0	17.0	27.0	27.0	16.0	16.0		16.0	16.0	
Total Split (%)	28.3%	45.0%	45.0%	28.3%	45.0%	45.0%	26.7%	26.7%		26.7%	26.7%	
Yellow Time (s)	5.0	5.0	5.0	5.0	5.0	5.0	5.0	5.0		5.0	5.0	
All-Red Time (s)	1.0	1.0	1.0	1.0	1.0	1.0	1.0	1.0		1.0	1.0	
Lost Time Adjust (s)	0.0	0.0	0.0	0.0	0.0	0.0		0.0			0.0	
Total Lost Time (s)	6.0	6.0	6.0	6.0	6.0	6.0		6.0			6.0	
Lead/Lag	Lead	Lag	Lag	Lead	Lag	Lag						
Lead-Lag Optimize?	Yes	Yes	Yes	Yes	Yes	Yes						
Recall Mode	None	C-Max	C-Max	None	Max	Max	Min	Min		Min	Min	
Act Effct Green (s)	10.6	34.8	34.8	10.0	21.4	21.4		10.0			10.0	60.0
Actuated g/C Ratio	0.18	0.58	0.58	0.17	0.36	0.36		0.17			0.17	1.00
v/c Ratio	0.58	0.60	0.01	0.02	0.33	0.01		0.07			0.05	0.00
Control Delay	27.4	12.8	0.0	21.2	15.2	13.0		18.5			21.7	0.0
Queue Delay	0.0	0.0	0.0	0.0	0.0	0.0		0.0			0.0	0.0
Total Delay	27.4	12.8	0.0	21.2	15.2	13.0		18.5			21.7	0.0
LOS	C	B	A	C	B	B		B			C	A
Approach Delay		15.9			15.2			18.5			11.3	
Approach LOS		B			B			B			B	

Intersection Summary

Area Type:	Other		
Cycle Length: 60			
Actuated Cycle Length: 60			
Offset: 0 (0%), Referenced to phase 2:EBT, Start of Green			
Natural Cycle: 60			
Control Type: Actuated-Coordinated			
Maximum v/c Ratio: 0.60			
Intersection Signal Delay: 15.7		Intersection LOS: B	
Intersection Capacity Utilization 58.9%		ICU Level of Service B	
Analysis Period (min) 15			

Splits and Phases: 1: RR 220 & Hwy 15:06

Lane Group	NBL	NBT	NBR	SBL	SBT	SBR	NEL	NET	NER	SWL	SWT	SWR
Lane Configurations												
Volume (vph)	5	292	63	9	16	83	678	311	5	41	243	59
Ideal Flow (vphpl)	1900	1900	1900	1900	1900	1900	1900	1900	1900	1900	1900	1900
Lane Width (m)	3.7	3.7	3.7	3.7	3.7	3.7	3.5	3.7	3.7	3.7	3.7	3.7
Storage Length (m)	0.0		0.0	0.0		60.0	0.0		240.0	220.0		220.0
Storage Lanes	0		0	0		1	2		1	1		1
Taper Length (m)	30.0			30.0			30.0			30.0		
Lane Util. Factor	1.00	1.00	1.00	1.00	1.00	0.88	0.97	0.95	1.00	1.00	0.95	1.00
Frt		0.976				0.850			0.850			0.850
Flt Protected					0.982		0.950			0.950		
Satd. Flow (prot)	0	1705	0	0	1715	2613	3148	3318	1484	1659	3318	1484
Flt Permitted		0.999			0.852		0.950			0.950		
Satd. Flow (perm)	0	1703	0	0	1488	2613	3148	3318	1484	1659	3318	1484
Right Turn on Red			Yes			Yes			Yes			Yes
Satd. Flow (RTOR)		13				286			123			205
Link Speed (k/h)		80			80			100			100	
Link Distance (m)		351.2			170.9			250.3			253.4	
Travel Time (s)		15.8			7.7			9.0			9.1	
Peak Hour Factor	0.85	0.85	0.85	0.85	0.85	0.85	0.85	0.85	0.85	0.85	0.85	0.85
Growth Factor	50%	100%	100%	100%	100%	100%	100%	100%	100%	100%	100%	100%
Adj. Flow (vph)	3	344	74	11	19	98	798	366	6	48	286	69
Shared Lane Traffic (%)												
Lane Group Flow (vph)	0	421	0	0	30	98	798	366	6	48	286	69
Turn Type	Perm	NA		Perm	NA	Free	Prot	NA	Perm	Prot	NA	Perm
Protected Phases		2			6		7	4		3	8	
Permitted Phases	2			6		Free			4			8
Detector Phase	2	2		6	6		7	4	4	3	8	8
Switch Phase												
Minimum Initial (s)	10.0	10.0		10.0	10.0		10.0	15.0	15.0	10.0	15.0	15.0
Minimum Split (s)	16.0	16.0		16.0	16.0		21.0	21.0	21.0	16.0	21.0	21.0
Total Split (s)	28.0	28.0		28.0	28.0		30.0	36.0	36.0	16.0	22.0	22.0
Total Split (%)	35.0%	35.0%		35.0%	35.0%		37.5%	45.0%	45.0%	20.0%	27.5%	27.5%
Yellow Time (s)	5.0	5.0		5.0	5.0		5.0	5.0	5.0	5.0	5.0	5.0
All-Red Time (s)	1.0	1.0		1.0	1.0		1.0	1.0	1.0	1.0	1.0	1.0
Lost Time Adjust (s)		-1.0			-1.0		0.0	0.0	0.0	-1.0	0.0	0.0
Total Lost Time (s)		5.0			5.0		6.0	6.0	6.0	5.0	6.0	6.0
Lead/Lag							Lead	Lag	Lag	Lead	Lag	Lag
Lead-Lag Optimize?							Yes	Yes	Yes	Yes		
Recall Mode	None	None		Max	Max		Max	C-Max	C-Max	None	None	None
Act Effct Green (s)		23.0			23.0	80.0	24.0	36.4	36.4	11.0	16.0	16.0
Actuated g/C Ratio		0.29			0.29	1.00	0.30	0.46	0.46	0.14	0.20	0.20
v/c Ratio		0.85			0.07	0.04	0.85	0.24	0.01	0.21	0.43	0.15
Control Delay		43.7			21.4	0.0	36.4	15.7	0.0	33.3	30.4	0.7
Queue Delay		0.0			0.0	0.0	0.0	0.0	0.0	0.0	0.0	0.0
Total Delay		43.7			21.4	0.0	36.4	15.7	0.0	33.3	30.4	0.7
LOS		D			C	A	D	B	A	C	C	A
Approach Delay		43.7			5.0			29.7			25.7	
Approach LOS		D			A			C			C	

Intersection Summary

Area Type:	Other		
Cycle Length: 80			
Actuated Cycle Length: 80			
Offset: 0 (0%), Referenced to phase 4:NET, Start of Green			
Natural Cycle: 75			
Control Type: Actuated-Coordinated			
Maximum v/c Ratio: 0.85			
Intersection Signal Delay: 30.2		Intersection LOS: C	
Intersection Capacity Utilization 67.2%		ICU Level of Service C	
Analysis Period (min) 15			

Splits and Phases: 2: Hwy 15:06 & Hwy 830/RR 214

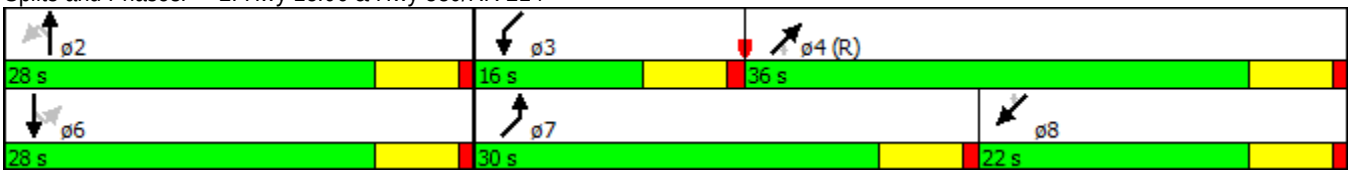

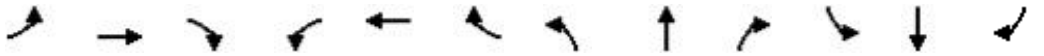

Lane Group	EBL	EBT	EBR	WBL	WBT	WBR	NBL	NBT	NBR	SBL	SBT	SBR
Lane Configurations												
Volume (vph)	27	482	5	5	1064	5	5	5	5	5	6	208
Ideal Flow (vphpl)	1900	1900	1900	1900	1900	1900	1900	1900	1900	1900	1900	1900
Lane Width (m)	3.5	3.7	3.5	3.5	3.7	3.5	4.0	4.0	4.0	3.5	3.5	3.7
Storage Length (m)	0.0		87.5	200.0		0.0	0.0		0.0	0.0		60.0
Storage Lanes	2		1	1		1	0		0	0		1
Taper Length (m)	50.0			30.0			30.0			30.0		
Lane Util. Factor	0.97	0.95	1.00	1.00	0.95	1.00	1.00	1.00	1.00	1.00	1.00	0.88
Frt			0.850			0.850		0.955				0.850
Flt Protected	0.950			0.950				0.984			0.977	
Satd. Flow (prot)	3148	3318	1452	1623	3318	1452	0	1695	0	0	1669	2613
Flt Permitted	0.950			0.950				0.909			0.877	
Satd. Flow (perm)	3148	3318	1452	1623	3318	1452	0	1566	0	0	1498	2613
Right Turn on Red			Yes			No			Yes			Yes
Satd. Flow (RTOR)			164					6				273
Link Speed (k/h)		100			100			80			80	
Link Distance (m)		239.4			250.6			200.1			259.6	
Travel Time (s)		8.6			9.0			9.0			11.7	
Peak Hour Factor	0.85	0.85	0.85	0.85	0.85	0.85	0.85	0.85	0.85	0.85	0.85	0.85
Adj. Flow (vph)	32	567	6	6	1252	6	6	6	6	6	7	245
Shared Lane Traffic (%)												
Lane Group Flow (vph)	32	567	6	6	1252	6	0	18	0	0	13	245
Turn Type	Prot	NA	Perm	Prot	NA	custom	Perm	NA		Perm	NA	Free
Protected Phases	5	2		1				8			4	
Permitted Phases			2		6	6	8			4		Free
Detector Phase	5	2	2	1	6	6	8	8		4	4	
Switch Phase												
Minimum Initial (s)	10.0	15.0	15.0	10.0	15.0	15.0	10.0	10.0		10.0	10.0	
Minimum Split (s)	16.0	21.0	21.0	16.0	21.0	21.0	16.0	16.0		16.0	16.0	
Total Split (s)	16.0	28.0	28.0	16.0	28.0	28.0	16.0	16.0		16.0	16.0	
Total Split (%)	26.7%	46.7%	46.7%	26.7%	46.7%	46.7%	26.7%	26.7%		26.7%	26.7%	
Yellow Time (s)	5.0	5.0	5.0	5.0	5.0	5.0	5.0	5.0		5.0	5.0	
All-Red Time (s)	1.0	1.0	1.0	1.0	1.0	1.0	1.0	1.0		1.0	1.0	
Lost Time Adjust (s)	0.0	0.0	0.0	0.0	0.0	0.0		0.0			0.0	
Total Lost Time (s)	6.0	6.0	6.0	6.0	6.0	6.0		6.0			6.0	
Lead/Lag	Lead	Lag	Lag	Lead	Lag	Lag						
Lead-Lag Optimize?	Yes	Yes	Yes	Yes	Yes	Yes						
Recall Mode	None	C-Max	C-Max	None	Max	Max	Min	Min		Min	Min	
Act Effct Green (s)	10.0	34.8	34.8	10.0	31.6	31.6		10.0			10.0	60.0
Actuated g/C Ratio	0.17	0.58	0.58	0.17	0.53	0.53		0.17			0.17	1.00
v/c Ratio	0.06	0.29	0.01	0.02	0.72	0.01		0.07			0.05	0.09
Control Delay	21.5	8.3	0.0	21.2	18.5	11.4		18.3			21.7	0.1
Queue Delay	0.0	0.0	0.0	0.0	0.0	0.0		0.0			0.0	0.0
Total Delay	21.5	8.3	0.0	21.2	18.5	11.4		18.3			21.7	0.1
LOS	C	A	A	C	B	B		B			C	A
Approach Delay		9.0			18.5			18.3			1.2	
Approach LOS		A			B			B			A	

Intersection Summary

Area Type:	Other	
Cycle Length: 60		
Actuated Cycle Length: 60		
Offset: 0 (0%), Referenced to phase 2:EBT, Start of Green		
Natural Cycle: 60		
Control Type: Actuated-Coordinated		
Maximum v/c Ratio: 0.72		
Intersection Signal Delay: 13.7	Intersection LOS: B	
Intersection Capacity Utilization 47.7%	ICU Level of Service A	
Analysis Period (min) 15		

Splits and Phases: 1: RR 220 & Hwy 15:06

Lane Group	NBL	NBT	NBR	SBL	SBT	SBR	NEL	NET	NER	SWL	SWT	SWR
Lane Configurations												
Volume (vph)	5	28	57	66	322	558	116	357	5	116	409	5
Ideal Flow (vphpl)	1900	1900	1900	1900	1900	1900	1900	1900	1900	1900	1900	1900
Lane Width (m)	3.7	3.7	3.7	3.7	3.7	3.7	3.5	3.7	3.7	3.7	3.7	3.7
Storage Length (m)	0.0		0.0	0.0		60.0	0.0		240.0	220.0		220.0
Storage Lanes	0		0	0		1	2		1	1		1
Taper Length (m)	30.0			30.0			30.0			30.0		
Lane Util. Factor	1.00	1.00	1.00	1.00	1.00	0.88	0.97	0.95	1.00	1.00	0.95	1.00
Frt		0.912				0.850			0.850			0.850
Flt Protected		0.999			0.992		0.950			0.950		
Satd. Flow (prot)	0	1591	0	0	1732	2613	3148	3318	1484	1659	3318	1484
Flt Permitted		0.987			0.924		0.950			0.950		
Satd. Flow (perm)	0	1572	0	0	1614	2613	3148	3318	1484	1659	3318	1484
Right Turn on Red			Yes			Yes			Yes			Yes
Satd. Flow (RTOR)		67				656			140			140
Link Speed (k/h)		80			80			100			100	
Link Distance (m)		351.2			170.9			250.3			253.4	
Travel Time (s)		15.8			7.7			9.0			9.1	
Peak Hour Factor	0.85	0.85	0.85	0.85	0.85	0.85	0.85	0.85	0.85	0.85	0.85	0.85
Growth Factor	50%	100%	100%	100%	100%	100%	100%	100%	100%	100%	100%	100%
Adj. Flow (vph)	3	33	67	78	379	656	136	420	6	136	481	6
Shared Lane Traffic (%)												
Lane Group Flow (vph)	0	103	0	0	457	656	136	420	6	136	481	6
Turn Type	Perm	NA		Perm	NA	Free	Prot	NA	Perm	Prot	NA	Perm
Protected Phases		2			6		7	4		3	8	
Permitted Phases	2			6		Free			4			8
Detector Phase	2	2		6	6		7	4	4	3	8	8
Switch Phase												
Minimum Initial (s)	10.0	10.0		10.0	10.0		15.0	15.0	15.0	10.0	15.0	15.0
Minimum Split (s)	16.0	16.0		16.0	16.0		21.0	21.0	21.0	16.0	21.0	21.0
Total Split (s)	28.0	28.0		28.0	28.0		21.0	21.0	21.0	21.0	21.0	21.0
Total Split (%)	40.0%	40.0%		40.0%	40.0%		30.0%	30.0%	30.0%	30.0%	30.0%	30.0%
Yellow Time (s)	5.0	5.0		5.0	5.0		5.0	5.0	5.0	5.0	5.0	5.0
All-Red Time (s)	1.0	1.0		1.0	1.0		1.0	1.0	1.0	1.0	1.0	1.0
Lost Time Adjust (s)		-1.0			-1.0		0.0	0.0	0.0	-1.0	0.0	0.0
Total Lost Time (s)		5.0			5.0		6.0	6.0	6.0	5.0	6.0	6.0
Lead/Lag							Lead	Lag	Lag	Lead	Lag	Lag
Lead-Lag Optimize?							Yes	Yes	Yes	Yes		
Recall Mode	None	None		Max	Max		Max	C-Max	C-Max	None	None	None
Act Effct Green (s)		23.0			23.0	70.0	15.0	21.4	21.4	12.8	15.0	15.0
Actuated g/C Ratio		0.33			0.33	1.00	0.21	0.31	0.31	0.18	0.21	0.21
v/c Ratio		0.18			0.86	0.25	0.20	0.41	0.01	0.45	0.68	0.01
Control Delay		8.6			41.0	0.2	23.6	22.9	0.0	30.1	30.8	0.0
Queue Delay		0.0			0.0	0.0	0.0	0.0	0.0	0.0	0.0	0.0
Total Delay		8.6			41.0	0.2	23.6	22.9	0.0	30.1	30.8	0.0
LOS		A			D	A	C	C	A	C	C	A
Approach Delay		8.6			17.0			22.8			30.3	
Approach LOS		A			B			C			C	

Intersection Summary

Area Type:	Other		
Cycle Length: 70			
Actuated Cycle Length: 70			
Offset: 0 (0%), Referenced to phase 4:NET, Start of Green			
Natural Cycle: 70			
Control Type: Actuated-Coordinated			
Maximum v/c Ratio: 0.86			
Intersection Signal Delay: 21.4		Intersection LOS: C	
Intersection Capacity Utilization 66.4%		ICU Level of Service C	
Analysis Period (min) 15			

Splits and Phases: 2: Hwy 15:06 & Hwy 830/RR 214

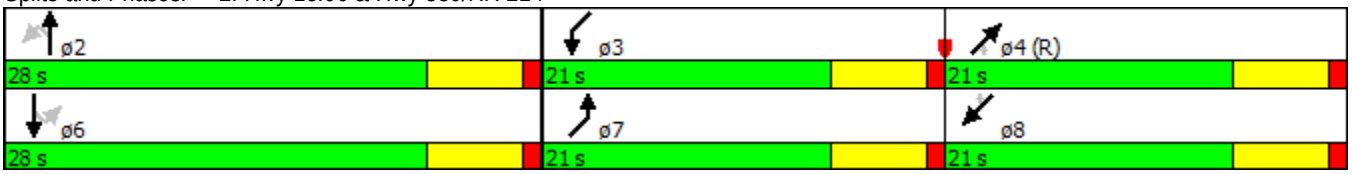

Lane Group	EBL	EBT	EBR	WBL	WBT	WBR	NBL	NBT	NBR	SBL	SBT	SBR
Lane Configurations												
Volume (vph)	759	1015	5	5	358	121	5	12	5	15	5	63
Ideal Flow (vphpl)	1900	1900	1900	1900	1900	1900	1900	1900	1900	1900	1900	1900
Lane Width (m)	3.5	3.7	3.5	3.5	3.7	3.5	4.0	4.0	4.0	3.5	3.5	3.7
Storage Length (m)	0.0		87.5	200.0		0.0	0.0		0.0	0.0		60.0
Storage Lanes	2		1	1		1	0		0	0		1
Taper Length (m)	50.0			30.0			30.0			30.0		
Lane Util. Factor	0.97	0.95	1.00	1.00	0.95	1.00	1.00	1.00	1.00	1.00	1.00	0.88
Frt			0.850			0.850		0.969				0.850
Flt Protected	0.950			0.950				0.989			0.964	
Satd. Flow (prot)	3148	3318	1452	1623	3318	1452	0	1729	0	0	1647	2613
Flt Permitted	0.950			0.950				0.931			0.773	
Satd. Flow (perm)	3148	3318	1452	1623	3318	1452	0	1627	0	0	1320	2613
Right Turn on Red			Yes			No			Yes			Yes
Satd. Flow (RTOR)			140					6				327
Link Speed (k/h)		100			100			80			80	
Link Distance (m)		239.4			250.6			200.1			259.6	
Travel Time (s)		8.6			9.0			9.0			11.7	
Peak Hour Factor	0.85	0.85	0.85	0.85	0.85	0.85	0.85	0.85	0.85	0.85	0.85	0.85
Adj. Flow (vph)	893	1194	6	6	421	142	6	14	6	18	6	74
Shared Lane Traffic (%)												
Lane Group Flow (vph)	893	1194	6	6	421	142	0	26	0	0	24	74
Turn Type	Prot	NA	Perm	Prot	NA	custom	Perm	NA		Perm	NA	Free
Protected Phases	5	2		1				8			4	
Permitted Phases			2		6	6	8			4		Free
Detector Phase	5	2	2	1	6	6	8	8		4	4	
Switch Phase												
Minimum Initial (s)	15.0	15.0	15.0	10.0	15.0	15.0	10.0	10.0		10.0	10.0	
Minimum Split (s)	21.0	21.0	21.0	16.0	21.0	21.0	21.0	21.0		16.0	16.0	
Total Split (s)	28.0	33.0	33.0	16.0	21.0	21.0	21.0	21.0		21.0	21.0	
Total Split (%)	40.0%	47.1%	47.1%	22.9%	30.0%	30.0%	30.0%	30.0%		30.0%	30.0%	
Yellow Time (s)	5.0	5.0	5.0	5.0	5.0	5.0	5.0	5.0		5.0	5.0	
All-Red Time (s)	1.0	1.0	1.0	1.0	1.0	1.0	1.0	1.0		1.0	1.0	
Lost Time Adjust (s)	0.0	0.0	0.0	0.0	0.0	0.0		0.0			0.0	
Total Lost Time (s)	6.0	6.0	6.0	6.0	6.0	6.0		6.0			6.0	
Lead/Lag	Lead	Lag	Lag	Lead	Lag	Lag						
Lead-Lag Optimize?	Yes	Yes	Yes	Yes	Yes	Yes						
Recall Mode	None	C-Max	C-Max	None	Max	Max	Min	Min		Min	Min	
Act Effct Green (s)	24.8	44.8	44.8	10.0	17.2	17.2		10.0			10.0	70.0
Actuated g/C Ratio	0.35	0.64	0.64	0.14	0.25	0.25		0.14			0.14	1.00
v/c Ratio	0.80	0.56	0.01	0.03	0.52	0.40		0.11			0.13	0.03
Control Delay	26.3	9.8	0.0	26.2	26.3	27.3		23.2			28.1	0.0
Queue Delay	0.0	0.0	0.0	0.0	0.0	0.0		0.0			0.0	0.0
Total Delay	26.3	9.8	0.0	26.2	26.3	27.3		23.2			28.1	0.0
LOS	C	A	A	C	C	C		C			C	A
Approach Delay		16.8			26.5			23.2			6.9	
Approach LOS		B			C			C			A	

Intersection Summary

Area Type:	Other		
Cycle Length: 70			
Actuated Cycle Length: 70			
Offset: 0 (0%), Referenced to phase 2:EBT, Start of Green			
Natural Cycle: 70			
Control Type: Actuated-Coordinated			
Maximum v/c Ratio: 0.80			
Intersection Signal Delay: 18.5		Intersection LOS: B	
Intersection Capacity Utilization 59.7%		ICU Level of Service B	
Analysis Period (min) 15			

Splits and Phases: 1: RR 220 & Hwy 15:06

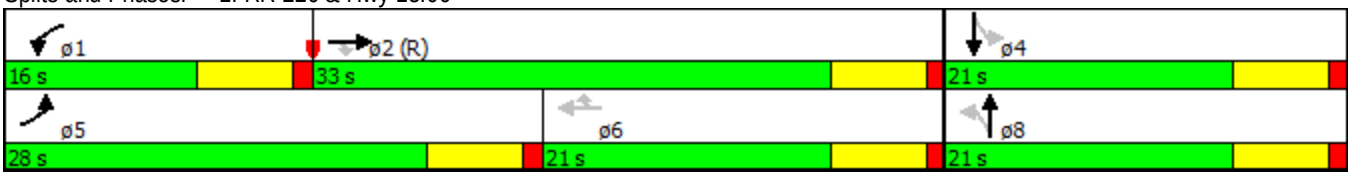

Lane Group	NBL	NBT	NBR	SBL	SBT	SBR	NEL	NET	NER	SWL	SWT	SWR
Lane Configurations												
Volume (vph)	5	315	69	10	18	90	741	342	5	45	267	63
Ideal Flow (vphpl)	1900	1900	1900	1900	1900	1900	1900	1900	1900	1900	1900	1900
Lane Width (m)	3.7	3.7	3.7	3.7	3.7	3.7	3.5	3.7	3.7	3.7	3.7	3.7
Storage Length (m)	0.0		0.0	0.0		60.0	0.0		240.0	220.0		220.0
Storage Lanes	0		0	0		1	2		1	1		1
Taper Length (m)	30.0			30.0			30.0			30.0		
Lane Util. Factor	1.00	1.00	1.00	1.00	1.00	0.88	0.97	0.95	1.00	1.00	0.95	1.00
Frt		0.976				0.850			0.850			0.850
Flt Protected					0.982		0.950			0.950		
Satd. Flow (prot)	0	1705	0	0	1715	2613	3148	3318	1484	1659	3318	1484
Flt Permitted		0.999			0.854		0.950			0.950		
Satd. Flow (perm)	0	1703	0	0	1491	2613	3148	3318	1484	1659	3318	1484
Right Turn on Red			Yes			Yes			Yes			Yes
Satd. Flow (RTOR)		12				229			98			164
Link Speed (k/h)		80			80			100			100	
Link Distance (m)		351.2			170.9			250.3			253.4	
Travel Time (s)		15.8			7.7			9.0			9.1	
Peak Hour Factor	0.85	0.85	0.85	0.85	0.85	0.85	0.85	0.85	0.85	0.85	0.85	0.85
Growth Factor	50%	100%	100%	100%	100%	100%	100%	100%	100%	100%	100%	100%
Adj. Flow (vph)	3	371	81	12	21	106	872	402	6	53	314	74
Shared Lane Traffic (%)												
Lane Group Flow (vph)	0	455	0	0	33	106	872	402	6	53	314	74
Turn Type	Perm	NA		Perm	NA	Free	Prot	NA	Perm	Prot	NA	Perm
Protected Phases		2			6		7	4		3	8	
Permitted Phases	2			6		Free			4			8
Detector Phase	2	2		6	6		7	4	4	3	8	8
Switch Phase												
Minimum Initial (s)	10.0	10.0		10.0	10.0		15.0	15.0	15.0	10.0	15.0	15.0
Minimum Split (s)	16.0	16.0		16.0	16.0		21.0	21.0	21.0	16.0	21.0	21.0
Total Split (s)	39.0	39.0		39.0	39.0		40.0	45.0	45.0	16.0	21.0	21.0
Total Split (%)	39.0%	39.0%		39.0%	39.0%		40.0%	45.0%	45.0%	16.0%	21.0%	21.0%
Yellow Time (s)	5.0	5.0		5.0	5.0		5.0	5.0	5.0	5.0	5.0	5.0
All-Red Time (s)	1.0	1.0		1.0	1.0		1.0	1.0	1.0	1.0	1.0	1.0
Lost Time Adjust (s)		-1.0			-1.0		0.0	0.0	0.0	-1.0	0.0	0.0
Total Lost Time (s)		5.0			5.0		6.0	6.0	6.0	5.0	6.0	6.0
Lead/Lag							Lead	Lag	Lag	Lead	Lag	Lag
Lead-Lag Optimize?							Yes	Yes	Yes	Yes		
Recall Mode	None	None		Max	Max		Max	C-Max	C-Max	None	None	None
Act Effct Green (s)		34.0			34.0	100.0	34.0	42.2	42.2	11.0	15.0	15.0
Actuated g/C Ratio		0.34			0.34	1.00	0.34	0.42	0.42	0.11	0.15	0.15
v/c Ratio		0.78			0.07	0.04	0.81	0.29	0.01	0.29	0.63	0.20
Control Delay		39.5			22.9	0.0	37.5	20.8	0.0	45.6	46.3	1.3
Queue Delay		0.0			0.0	0.0	0.0	0.0	0.0	0.0	0.0	0.0
Total Delay		39.5			22.9	0.0	37.5	20.8	0.0	45.6	46.3	1.3
LOS		D			C	A	D	C	A	D	D	A
Approach Delay		39.5			5.5			32.1			38.6	
Approach LOS		D			A			C			D	

Intersection Summary

Area Type:	Other	
Cycle Length: 100		
Actuated Cycle Length: 100		
Offset: 0 (0%), Referenced to phase 4:NET, Start of Green		
Natural Cycle: 80		
Control Type: Actuated-Coordinated		
Maximum v/c Ratio: 0.81		
Intersection Signal Delay: 33.2		Intersection LOS: C
Intersection Capacity Utilization 70.6%		ICU Level of Service C
Analysis Period (min) 15		

Splits and Phases: 2: Hwy 15:06 & Hwy 830/RR 214

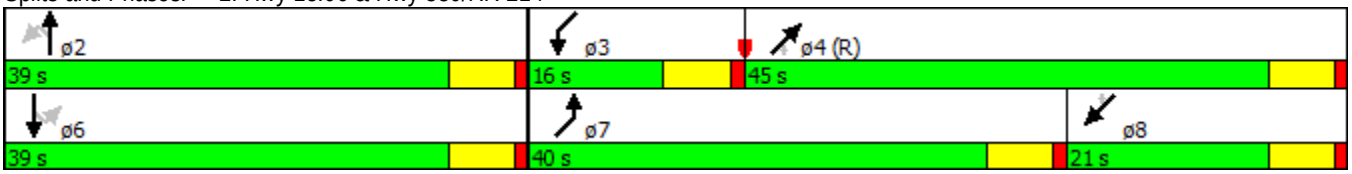

Lane Group	EBL	EBT	EBR	WBL	WBT	WBR	NBL	NBT	NBR	SBL	SBT	SBR
Lane Configurations												
Volume (vph)	81	519	5	5	1115	13	5	5	5	120	12	691
Ideal Flow (vphpl)	1900	1900	1900	1900	1900	1900	1900	1900	1900	1900	1900	1900
Lane Width (m)	3.5	3.7	3.5	3.5	3.7	3.5	4.0	4.0	4.0	3.5	3.5	3.7
Storage Length (m)	0.0		87.5	200.0		0.0	0.0		0.0	0.0		60.0
Storage Lanes	2		1	1		1	0		0	0		1
Taper Length (m)	50.0			30.0			30.0			30.0		
Lane Util. Factor	0.97	0.95	1.00	1.00	0.95	1.00	1.00	1.00	1.00	1.00	1.00	0.88
Frt			0.850			0.850		0.955				0.850
Flt Protected	0.950			0.950				0.984			0.956	
Satd. Flow (prot)	3148	3318	1452	1623	3318	1452	0	1695	0	0	1633	2613
Flt Permitted	0.950			0.950				0.888			0.732	
Satd. Flow (perm)	3148	3318	1452	1623	3318	1452	0	1530	0	0	1250	2613
Right Turn on Red			Yes			No			Yes			Yes
Satd. Flow (RTOR)			123					6				813
Link Speed (k/h)		100			100			80			80	
Link Distance (m)		239.4			250.6			200.1			259.6	
Travel Time (s)		8.6			9.0			9.0			11.7	
Peak Hour Factor	0.85	0.85	0.85	0.85	0.85	0.85	0.85	0.85	0.85	0.85	0.85	0.85
Adj. Flow (vph)	95	611	6	6	1312	15	6	6	6	141	14	813
Shared Lane Traffic (%)												
Lane Group Flow (vph)	95	611	6	6	1312	15	0	18	0	0	155	813
Turn Type	Prot	NA	Perm	Prot	NA	custom	Perm	NA		Perm	NA	Free
Protected Phases	5	2		1				8			4	
Permitted Phases			2		6	6	8			4		Free
Detector Phase	5	2	2	1	6	6	8	8		4	4	
Switch Phase												
Minimum Initial (s)	15.0	15.0	15.0	10.0	15.0	15.0	10.0	10.0		10.0	10.0	
Minimum Split (s)	21.0	21.0	21.0	16.0	21.0	21.0	21.0	21.0		16.0	16.0	
Total Split (s)	21.0	38.0	38.0	21.0	38.0	38.0	21.0	21.0		21.0	21.0	
Total Split (%)	26.3%	47.5%	47.5%	26.3%	47.5%	47.5%	26.3%	26.3%		26.3%	26.3%	
Yellow Time (s)	5.0	5.0	5.0	5.0	5.0	5.0	5.0	5.0		5.0	5.0	
All-Red Time (s)	1.0	1.0	1.0	1.0	1.0	1.0	1.0	1.0		1.0	1.0	
Lost Time Adjust (s)	0.0	0.0	0.0	0.0	0.0	0.0		0.0			0.0	
Total Lost Time (s)	6.0	6.0	6.0	6.0	6.0	6.0		6.0			6.0	
Lead/Lag	Lead	Lag	Lag	Lead	Lag	Lag						
Lead-Lag Optimize?	Yes	Yes	Yes	Yes	Yes	Yes						
Recall Mode	None	C-Max	C-Max	None	Max	Max	Min	Min		Min	Min	
Act Effct Green (s)	15.0	51.2	51.2	10.0	37.6	37.6		13.6			13.6	80.0
Actuated g/C Ratio	0.19	0.64	0.64	0.12	0.47	0.47		0.17			0.17	1.00
v/c Ratio	0.16	0.29	0.01	0.03	0.84	0.02		0.07			0.73	0.31
Control Delay	28.1	8.1	0.0	31.2	28.2	14.8		22.3			52.4	0.3
Queue Delay	0.0	0.0	0.0	0.0	0.0	0.0		0.0			0.0	0.0
Total Delay	28.1	8.1	0.0	31.2	28.2	14.8		22.3			52.4	0.3
LOS	C	A	A	C	C	B		C			D	A
Approach Delay		10.7			28.0			22.3			8.7	
Approach LOS		B			C			C			A	

Intersection Summary

Area Type:	Other		
Cycle Length: 80			
Actuated Cycle Length: 80			
Offset: 0 (0%), Referenced to phase 2:EBT, Start of Green			
Natural Cycle: 80			
Control Type: Actuated-Coordinated			
Maximum v/c Ratio: 0.84			
Intersection Signal Delay: 17.8		Intersection LOS: B	
Intersection Capacity Utilization 58.6%		ICU Level of Service B	
Analysis Period (min) 15			

Splits and Phases: 1: RR 220 & Hwy 15:06

Lane Group	NBL	NBT	NBR	SBL	SBT	SBR	NEL	NET	NER	SWL	SWT	SWR
Lane Configurations												
Volume (vph)	5	30	63	70	345	621	123	393	6	128	450	5
Ideal Flow (vphpl)	1900	1900	1900	1900	1900	1900	1900	1900	1900	1900	1900	1900
Lane Width (m)	3.7	3.7	3.7	3.7	3.7	3.7	3.5	3.7	3.7	3.7	3.7	3.7
Storage Length (m)	0.0		0.0	0.0		60.0	0.0		240.0	220.0		220.0
Storage Lanes	0		0	0		1	2		1	1		1
Taper Length (m)	30.0			30.0			30.0			30.0		
Lane Util. Factor	1.00	1.00	1.00	1.00	1.00	0.88	0.97	0.95	1.00	1.00	0.95	1.00
Frt		0.911				0.850			0.850			0.850
Flt Protected		0.999			0.992		0.950			0.950		
Satd. Flow (prot)	0	1589	0	0	1732	2613	3148	3318	1484	1659	3318	1484
Flt Permitted		0.989			0.925		0.950			0.950		
Satd. Flow (perm)	0	1574	0	0	1615	2613	3148	3318	1484	1659	3318	1484
Right Turn on Red			Yes			Yes			Yes			Yes
Satd. Flow (RTOR)		74				731			131			131
Link Speed (k/h)		80			80			100			100	
Link Distance (m)		351.2			170.9			250.3			253.4	
Travel Time (s)		15.8			7.7			9.0			9.1	
Peak Hour Factor	0.85	0.85	0.85	0.85	0.85	0.85	0.85	0.85	0.85	0.85	0.85	0.85
Growth Factor	50%	100%	100%	100%	100%	100%	100%	100%	100%	100%	100%	100%
Adj. Flow (vph)	3	35	74	82	406	731	145	462	7	151	529	6
Shared Lane Traffic (%)												
Lane Group Flow (vph)	0	112	0	0	488	731	145	462	7	151	529	6
Turn Type	Perm	NA		Perm	NA	Free	Prot	NA	Perm	Prot	NA	Perm
Protected Phases		2			6		7	4		3	8	
Permitted Phases	2			6		Free			4			8
Detector Phase	2	2		6	6		7	4	4	3	8	8
Switch Phase												
Minimum Initial (s)	10.0	10.0		10.0	10.0		10.0	15.0	15.0	10.0	15.0	15.0
Minimum Split (s)	16.0	16.0		16.0	16.0		21.0	21.0	21.0	16.0	21.0	21.0
Total Split (s)	33.0	33.0		33.0	33.0		21.0	21.0	21.0	21.0	21.0	21.0
Total Split (%)	44.0%	44.0%		44.0%	44.0%		28.0%	28.0%	28.0%	28.0%	28.0%	28.0%
Yellow Time (s)	5.0	5.0		5.0	5.0		5.0	5.0	5.0	5.0	5.0	5.0
All-Red Time (s)	1.0	1.0		1.0	1.0		1.0	1.0	1.0	1.0	1.0	1.0
Lost Time Adjust (s)		-1.0			-1.0		0.0	0.0	0.0	-1.0	0.0	0.0
Total Lost Time (s)		5.0			5.0		6.0	6.0	6.0	5.0	6.0	6.0
Lead/Lag							Lead	Lag	Lag	Lead	Lag	Lag
Lead-Lag Optimize?							Yes	Yes	Yes	Yes		
Recall Mode	None	None		Max	Max		Max	C-Max	C-Max	None	None	None
Act Effct Green (s)		28.0			28.0	75.0	15.0	17.8	17.8	13.2	15.0	15.0
Actuated g/C Ratio		0.37			0.37	1.00	0.20	0.24	0.24	0.18	0.20	0.20
v/c Ratio		0.18			0.81	0.28	0.23	0.59	0.02	0.52	0.80	0.01
Control Delay		7.5			34.0	0.3	26.3	29.5	0.0	34.2	39.2	0.0
Queue Delay		0.0			0.0	0.0	0.0	0.0	0.0	0.0	0.0	0.0
Total Delay		7.5			34.0	0.3	26.3	29.5	0.0	34.2	39.2	0.0
LOS		A			C	A	C	C	A	C	D	A
Approach Delay		7.5			13.8			28.4			37.8	
Approach LOS		A			B			C			D	

Intersection Summary

Area Type:	Other		
Cycle Length: 75			
Actuated Cycle Length: 75			
Offset: 0 (0%), Referenced to phase 4:NET, Start of Green			
Natural Cycle: 70			
Control Type: Actuated-Coordinated			
Maximum v/c Ratio: 0.81			
Intersection Signal Delay: 23.2		Intersection LOS: C	
Intersection Capacity Utilization 63.7%		ICU Level of Service B	
Analysis Period (min) 15			

Splits and Phases: 2: Hwy 15:06 & Hwy 830/RR 214

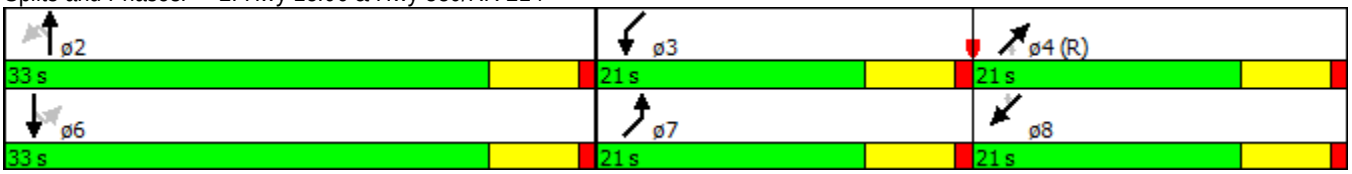

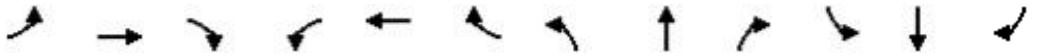

Lane Group	EBL	EBT	EBR	WBL	WBT	WBR	NBL	NBT	NBR	SBL	SBT	SBR
Lane Configurations												
Volume (vph)	1010	1045	5	5	383	180	5	15	5	22	5	91
Ideal Flow (vphpl)	1900	1900	1900	1900	1900	1900	1900	1900	1900	1900	1900	1900
Lane Width (m)	3.5	3.7	3.5	3.5	3.7	3.5	4.0	4.0	4.0	3.5	3.5	3.7
Storage Length (m)	0.0		87.5	200.0		0.0	0.0		0.0	0.0		60.0
Storage Lanes	2		1	1		1	0		0	0		1
Taper Length (m)	50.0			30.0			30.0			30.0		
Lane Util. Factor	0.97	0.95	1.00	1.00	0.95	1.00	1.00	1.00	1.00	1.00	1.00	0.88
Frt			0.850			0.850		0.973				0.850
Flt Protected	0.950			0.950				0.990			0.961	
Satd. Flow (prot)	3148	3318	1452	1623	3318	1452	0	1738	0	0	1641	2613
Flt Permitted	0.950			0.950				0.936			0.746	
Satd. Flow (perm)	3148	3318	1452	1623	3318	1452	0	1643	0	0	1274	2613
Right Turn on Red			Yes			No			Yes			Yes
Satd. Flow (RTOR)			123					6				286
Link Speed (k/h)		100			100			80			80	
Link Distance (m)		239.4			250.6			200.1			259.6	
Travel Time (s)		8.6			9.0			9.0			11.7	
Peak Hour Factor	0.85	0.85	0.85	0.85	0.85	0.85	0.85	0.85	0.85	0.85	0.85	0.85
Adj. Flow (vph)	1188	1229	6	6	451	212	6	18	6	26	6	107
Shared Lane Traffic (%)												
Lane Group Flow (vph)	1188	1229	6	6	451	212	0	30	0	0	32	107
Turn Type	Prot	NA	Perm	Prot	NA	custom	Perm	NA		Perm	NA	Free
Protected Phases	5	2		1				8			4	
Permitted Phases			2		6	6	8			4		Free
Detector Phase	5	2	2	1	6	6	8	8		4	4	
Switch Phase												
Minimum Initial (s)	15.0	15.0	15.0	10.0	15.0	15.0	10.0	10.0		10.0	10.0	
Minimum Split (s)	21.0	21.0	21.0	16.0	21.0	21.0	21.0	21.0		16.0	16.0	
Total Split (s)	38.0	43.0	43.0	16.0	21.0	21.0	21.0	21.0		21.0	21.0	
Total Split (%)	47.5%	53.8%	53.8%	20.0%	26.3%	26.3%	26.3%	26.3%		26.3%	26.3%	
Yellow Time (s)	5.0	5.0	5.0	5.0	5.0	5.0	5.0	5.0		5.0	5.0	
All-Red Time (s)	1.0	1.0	1.0	1.0	1.0	1.0	1.0	1.0		1.0	1.0	
Lost Time Adjust (s)	0.0	0.0	0.0	0.0	0.0	0.0		0.0			0.0	
Total Lost Time (s)	6.0	6.0	6.0	6.0	6.0	6.0		6.0			6.0	
Lead/Lag	Lead	Lag	Lag	Lead	Lag	Lag						
Lead-Lag Optimize?	Yes	Yes	Yes	Yes	Yes	Yes						
Recall Mode	None	C-Max	C-Max	None	Max	Max	Min	Min		Min	Min	
Act Effct Green (s)	35.2	54.8	54.8	10.0	16.8	16.8		10.0			10.0	80.0
Actuated g/C Ratio	0.44	0.68	0.68	0.12	0.21	0.21		0.12			0.12	1.00
v/c Ratio	0.86	0.54	0.01	0.03	0.65	0.70		0.14			0.20	0.04
Control Delay	27.5	8.7	0.0	31.2	34.6	44.6		28.5			34.9	0.0
Queue Delay	0.0	0.0	0.0	0.0	0.0	0.0		0.0			0.0	0.0
Total Delay	27.5	8.7	0.0	31.2	34.6	44.6		28.5			34.9	0.0
LOS	C	A	A	C	C	D		C			C	A
Approach Delay		17.9			37.7			28.5			8.1	
Approach LOS		B			D			C			A	

Intersection Summary

Area Type:	Other		
Cycle Length: 80			
Actuated Cycle Length: 80			
Offset: 0 (0%), Referenced to phase 2:EBT, Start of Green			
Natural Cycle: 80			
Control Type: Actuated-Coordinated			
Maximum v/c Ratio: 0.86			
Intersection Signal Delay: 21.6		Intersection LOS: C	
Intersection Capacity Utilization 64.6%		ICU Level of Service C	
Analysis Period (min) 15			

Splits and Phases: 1: RR 220 & Hwy 15:06

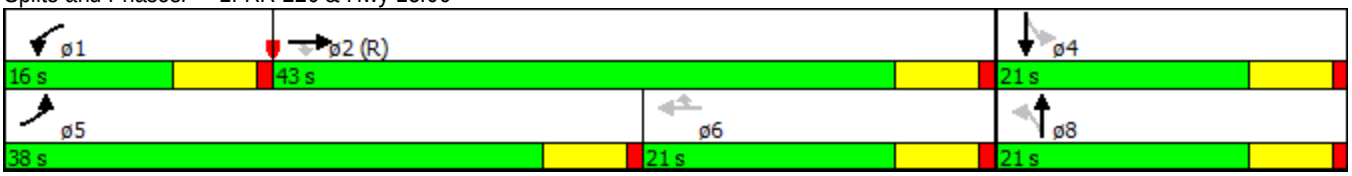

Lane Group	NBL	NBT	NBR	SBL	SBT	SBR	NEL	NET	NER	SWL	SWT	SWR
Lane Configurations												
Volume (vph)	5	327	76	10	19	94	775	372	5	49	292	66
Ideal Flow (vphpl)	1900	1900	1900	1900	1900	1900	1900	1900	1900	1900	1900	1900
Lane Width (m)	3.7	3.7	3.7	3.7	3.7	3.7	3.5	3.7	3.7	3.7	3.7	3.7
Storage Length (m)	0.0		0.0	0.0		60.0	0.0		240.0	220.0		250.0
Storage Lanes	0		0	0		1	2		1	1		1
Taper Length (m)	30.0			30.0			30.0			30.0		
Lane Util. Factor	1.00	1.00	1.00	1.00	1.00	0.88	0.97	0.95	1.00	1.00	0.95	1.00
Frt		0.975				0.850			0.850			0.850
Flt Protected					0.983		0.950			0.950		
Satd. Flow (prot)	0	1703	0	0	1717	2613	3148	3318	1484	1659	3318	1484
Flt Permitted		0.999			0.844		0.950			0.950		
Satd. Flow (perm)	0	1701	0	0	1474	2613	3148	3318	1484	1659	3318	1484
Right Turn on Red			Yes			Yes			Yes			Yes
Satd. Flow (RTOR)		13				255			109			182
Link Speed (k/h)		80			80			100			100	
Link Distance (m)		351.2			170.9			250.3			253.4	
Travel Time (s)		15.8			7.7			9.0			9.1	
Peak Hour Factor	0.85	0.85	0.85	0.85	0.85	0.85	0.85	0.85	0.85	0.85	0.85	0.85
Growth Factor	50%	100%	100%	100%	100%	100%	100%	100%	100%	100%	100%	100%
Adj. Flow (vph)	3	385	89	12	22	111	912	438	6	58	344	78
Shared Lane Traffic (%)												
Lane Group Flow (vph)	0	477	0	0	34	111	912	438	6	58	344	78
Turn Type	Perm	NA		Perm	NA	Free	Prot	NA	Perm	Prot	NA	Perm
Protected Phases		2			6		7	4		3	8	
Permitted Phases	2			6		Free			4			8
Detector Phase	2	2		6	6		7	4	4	3	8	8
Switch Phase												
Minimum Initial (s)	10.0	10.0		10.0	10.0		15.0	15.0	15.0	10.0	15.0	15.0
Minimum Split (s)	16.0	16.0		16.0	16.0		21.0	21.0	21.0	16.0	21.0	21.0
Total Split (s)	33.0	33.0		33.0	33.0		35.0	41.0	41.0	16.0	22.0	22.0
Total Split (%)	36.7%	36.7%		36.7%	36.7%		38.9%	45.6%	45.6%	17.8%	24.4%	24.4%
Yellow Time (s)	5.0	5.0		5.0	5.0		5.0	5.0	5.0	5.0	5.0	5.0
All-Red Time (s)	1.0	1.0		1.0	1.0		1.0	1.0	1.0	1.0	1.0	1.0
Lost Time Adjust (s)		-1.0			-1.0		0.0	0.0	0.0	-1.0	0.0	0.0
Total Lost Time (s)		5.0			5.0		6.0	6.0	6.0	5.0	6.0	6.0
Lead/Lag							Lead	Lag	Lag	Lead	Lag	Lag
Lead-Lag Optimize?							Yes	Yes	Yes	Yes		
Recall Mode	None	None		Max	Max		Max	C-Max	C-Max	None	None	None
Act Effct Green (s)		28.0			28.0	90.0	29.0	38.2	38.2	11.0	16.0	16.0
Actuated g/C Ratio		0.31			0.31	1.00	0.32	0.42	0.42	0.12	0.18	0.18
v/c Ratio		0.89			0.07	0.04	0.90	0.31	0.01	0.29	0.58	0.19
Control Delay		49.3			22.6	0.0	42.5	19.1	0.0	40.1	38.5	1.0
Queue Delay		0.0			0.0	0.0	0.0	0.0	0.0	0.0	0.0	0.0
Total Delay		49.3			22.6	0.0	42.5	19.1	0.0	40.1	38.5	1.0
LOS		D			C	A	D	B	A	D	D	A
Approach Delay		49.3			5.3			34.7			32.6	
Approach LOS		D			A			C			C	

Intersection Summary

Area Type:	Other	
Cycle Length: 90		
Actuated Cycle Length: 90		
Offset: 0 (0%), Referenced to phase 4:NET, Start of Green		
Natural Cycle: 90		
Control Type: Actuated-Coordinated		
Maximum v/c Ratio: 0.90		
Intersection Signal Delay: 35.4		Intersection LOS: D
Intersection Capacity Utilization 72.6%		ICU Level of Service C
Analysis Period (min) 15		

Splits and Phases: 2: Hwy 15:06 & Hwy 830/RR 214

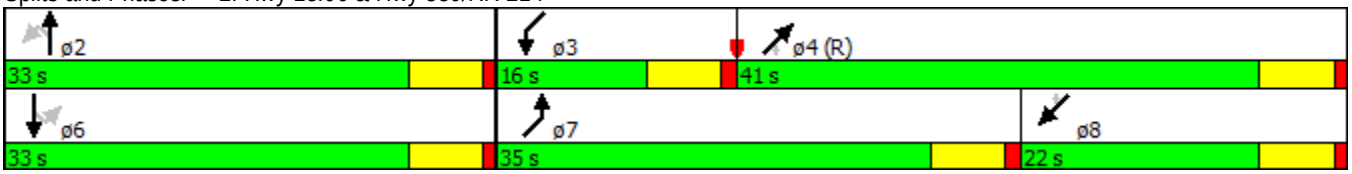

Lane Group	EBL	EBT	EBR	WBL	WBT	WBR	NBL	NBT	NBR	SBL	SBT	SBR
Lane Configurations												
Volume (vph)	84	555	5	5	1165	20	5	5	5	179	15	942
Ideal Flow (vphpl)	1900	1900	1900	1900	1900	1900	1900	1900	1900	1900	1900	1900
Lane Width (m)	3.5	3.7	3.5	3.5	3.7	3.5	4.0	4.0	4.0	3.5	3.5	3.7
Storage Length (m)	0.0		87.5	200.0		0.0	0.0		0.0	0.0		60.0
Storage Lanes	2		1	1		1	0		0	0		1
Taper Length (m)	50.0			30.0			30.0			30.0		
Lane Util. Factor	0.97	0.95	1.00	1.00	0.95	1.00	1.00	1.00	1.00	1.00	1.00	0.88
Frt			0.850			0.850		0.955				0.850
Flt Protected	0.950			0.950				0.984			0.956	
Satd. Flow (prot)	3148	3318	1452	1623	3318	1452	0	1695	0	0	1633	2613
Flt Permitted	0.950			0.404				0.900			0.730	
Satd. Flow (perm)	3148	3318	1452	690	3318	1452	0	1551	0	0	1247	2613
Right Turn on Red			Yes			No			Yes			Yes
Satd. Flow (RTOR)			109					6				835
Link Speed (k/h)		100			100			80			80	
Link Distance (m)		239.4			250.6			200.1			259.6	
Travel Time (s)		8.6			9.0			9.0			11.7	
Peak Hour Factor	0.85	0.85	0.85	0.85	0.85	0.85	0.85	0.85	0.85	0.85	0.85	0.85
Adj. Flow (vph)	99	653	6	6	1371	24	6	6	6	211	18	1108
Shared Lane Traffic (%)												
Lane Group Flow (vph)	99	653	6	6	1371	24	0	18	0	0	229	1108
Turn Type	Prot	NA	Perm	custom	NA	custom	Perm	NA		pm+pt	NA	Free
Protected Phases	5	2						8		7	4	
Permitted Phases			2	6	6	6	8			4		Free
Detector Phase	5	2	2	6	6	6	8	8		7	4	
Switch Phase												
Minimum Initial (s)	7.0	15.0	15.0	15.0	15.0	15.0	10.0	10.0		7.0	10.0	
Minimum Split (s)	13.0	21.0	21.0	21.0	21.0	21.0	21.0	21.0		13.0	16.0	
Total Split (s)	13.0	56.0	56.0	43.0	43.0	43.0	21.0	21.0		13.0	34.0	
Total Split (%)	14.4%	62.2%	62.2%	47.8%	47.8%	47.8%	23.3%	23.3%		14.4%	37.8%	
Yellow Time (s)	5.0	5.0	5.0	5.0	5.0	5.0	5.0	5.0		5.0	5.0	
All-Red Time (s)	1.0	1.0	1.0	1.0	1.0	1.0	1.0	1.0		1.0	1.0	
Lost Time Adjust (s)	0.0	0.0	0.0	0.0	0.0	0.0		0.0			0.0	
Total Lost Time (s)	6.0	6.0	6.0	6.0	6.0	6.0		6.0			6.0	
Lead/Lag	Lead			Lag	Lag	Lag	Lag	Lag		Lead		
Lead-Lag Optimize?	Yes			Yes	Yes	Yes	Yes	Yes		Yes		
Recall Mode	None	C-Max	C-Max	Max	Max	Max	Min	Min		None	Min	
Act Effct Green (s)	7.5	55.7	55.7	44.8	44.8	44.8		22.3			22.3	90.0
Actuated g/C Ratio	0.08	0.62	0.62	0.50	0.50	0.50		0.25			0.25	1.00
v/c Ratio	0.38	0.32	0.01	0.02	0.83	0.03		0.05			0.74	0.42
Control Delay	43.5	9.5	0.0	15.8	28.2	15.6		18.1			45.1	0.5
Queue Delay	0.0	0.0	0.0	0.0	0.0	0.0		0.0			0.0	0.0
Total Delay	43.5	9.5	0.0	15.8	28.2	15.6		18.1			45.1	0.5
LOS	D	A	A	B	C	B		B			D	A
Approach Delay		13.9			27.9			18.1			8.2	
Approach LOS		B			C			B			A	

Intersection Summary

Area Type:	Other		
Cycle Length: 90			
Actuated Cycle Length: 90			
Offset: 0 (0%), Referenced to phase 2:EBT, Start of Green			
Natural Cycle: 90			
Control Type: Actuated-Coordinated			
Maximum v/c Ratio: 0.83			
Intersection Signal Delay: 17.3		Intersection LOS: B	
Intersection Capacity Utilization 63.3%		ICU Level of Service B	
Analysis Period (min) 15			

Splits and Phases: 1: RR 220 & Hwy 15:06

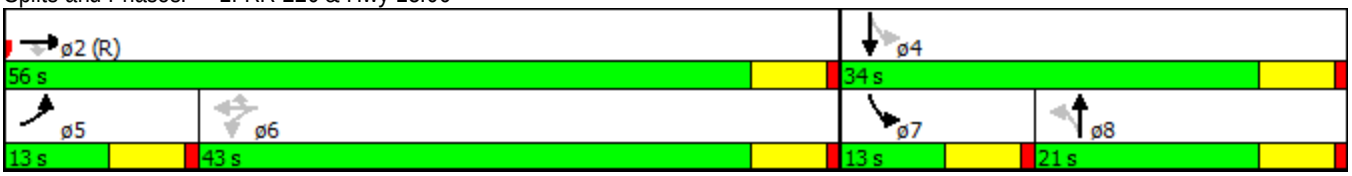

Lane Group	NBL	NBT	NBR	SBL	SBT	SBR	NEL	NET	NER	SWL	SWT	SWR
Lane Configurations												
Volume (vph)	5	31	68	73	357	655	127	428	6	139	491	5
Ideal Flow (vphpl)	1900	1900	1900	1900	1900	1900	1900	1900	1900	1900	1900	1900
Lane Width (m)	3.7	3.7	3.7	3.7	3.7	3.7	3.5	3.7	3.7	3.7	3.7	3.7
Storage Length (m)	0.0		0.0	0.0		60.0	0.0		240.0	220.0		220.0
Storage Lanes	0		0	0		1	2		1	1		1
Taper Length (m)	30.0			30.0			30.0			30.0		
Lane Util. Factor	1.00	1.00	1.00	1.00	1.00	0.88	0.97	0.95	1.00	1.00	0.95	1.00
Frt		0.909				0.850			0.850			0.850
Flt Protected		0.999			0.992		0.950			0.950		
Satd. Flow (prot)	0	1586	0	0	1732	2613	3148	3318	1484	1659	3318	1484
Flt Permitted		0.989			0.923		0.950			0.950		
Satd. Flow (perm)	0	1570	0	0	1612	2613	3148	3318	1484	1659	3318	1484
Right Turn on Red			Yes			Yes			Yes			Yes
Satd. Flow (RTOR)		80				771			140			140
Link Speed (k/h)		80			80			100			100	
Link Distance (m)		351.2			170.9			250.3			253.4	
Travel Time (s)		15.8			7.7			9.0			9.1	
Peak Hour Factor	0.85	0.85	0.85	0.85	0.85	0.85	0.85	0.85	0.85	0.85	0.85	0.85
Growth Factor	50%	100%	100%	100%	100%	100%	100%	100%	100%	100%	100%	100%
Adj. Flow (vph)	3	36	80	86	420	771	149	504	7	164	578	6
Shared Lane Traffic (%)												
Lane Group Flow (vph)	0	119	0	0	506	771	149	504	7	164	578	6
Turn Type	Perm	NA		Perm	NA	Free	Prot	NA	Perm	Prot	NA	Perm
Protected Phases		2			6		7	4		3	8	
Permitted Phases	2			6		Free			4			8
Detector Phase	2	2		6	6		7	4	4	3	8	8
Switch Phase												
Minimum Initial (s)	10.0	10.0		10.0	10.0		7.0	15.0	15.0	7.0	15.0	15.0
Minimum Split (s)	16.0	16.0		16.0	16.0		13.0	21.0	21.0	13.0	21.0	21.0
Total Split (s)	33.0	33.0		33.0	33.0		15.0	22.0	22.0	15.0	22.0	22.0
Total Split (%)	47.1%	47.1%		47.1%	47.1%		21.4%	31.4%	31.4%	21.4%	31.4%	31.4%
Yellow Time (s)	5.0	5.0		5.0	5.0		5.0	5.0	5.0	5.0	5.0	5.0
All-Red Time (s)	1.0	1.0		1.0	1.0		1.0	1.0	1.0	1.0	1.0	1.0
Lost Time Adjust (s)		-1.0			-1.0		0.0	0.0	0.0	-1.0	0.0	0.0
Total Lost Time (s)		5.0			5.0		6.0	6.0	6.0	5.0	6.0	6.0
Lead/Lag							Lead	Lag	Lag	Lead	Lag	Lag
Lead-Lag Optimize?							Yes	Yes	Yes	Yes		
Recall Mode	None	None		Max	Max		None	C-Max	C-Max	None	None	None
Act Effct Green (s)		28.0			28.0	70.0	8.2	16.2	16.2	9.8	19.4	19.4
Actuated g/C Ratio		0.40			0.40	1.00	0.12	0.23	0.23	0.14	0.28	0.28
v/c Ratio		0.18			0.79	0.30	0.40	0.66	0.02	0.71	0.63	0.01
Control Delay		6.4			29.3	0.3	31.9	29.2	0.0	47.6	27.6	0.0
Queue Delay		0.0			0.0	0.0	0.0	0.0	0.0	0.0	0.0	0.0
Total Delay		6.4			29.3	0.3	31.9	29.2	0.0	47.6	27.6	0.0
LOS		A			C	A	C	C	A	D	C	A
Approach Delay		6.4			11.8			29.5			31.8	
Approach LOS		A			B			C			C	

Intersection Summary

Area Type:	Other	
Cycle Length: 70		
Actuated Cycle Length: 70		
Offset: 0 (0%), Referenced to phase 4:NET, Start of Green		
Natural Cycle: 60		
Control Type: Actuated-Coordinated		
Maximum v/c Ratio: 0.79		
Intersection Signal Delay: 21.0	Intersection LOS: C	
Intersection Capacity Utilization 63.1%	ICU Level of Service B	
Analysis Period (min) 15		

Splits and Phases: 2: Hwy 15:06 & Hwy 830/RR 214

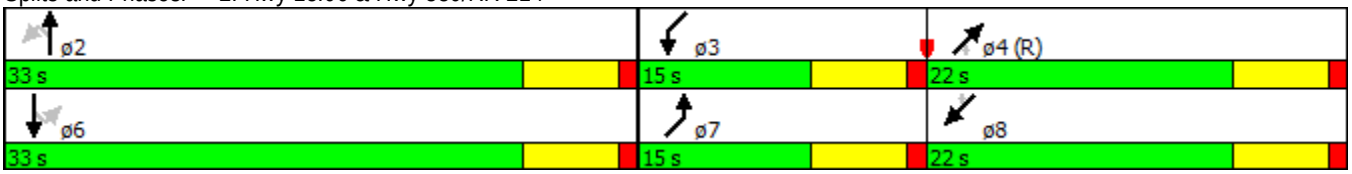

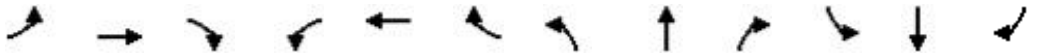

Lane Group	EBL	EBT	EBR	WBL	WBT	WBR	NBL	NBT	NBR	SBL	SBT	SBR
Lane Configurations												
Volume (vph)	703	1076	5	5	408	107	5	12	5	14	5	56
Ideal Flow (vphpl)	1900	1900	1900	1900	1900	1900	1900	1900	1900	1900	1900	1900
Lane Width (m)	3.5	3.7	3.5	3.5	3.7	3.5	4.0	4.0	4.0	3.5	3.5	3.7
Storage Length (m)	0.0		87.5	200.0		0.0	0.0		0.0	0.0		60.0
Storage Lanes	2		1	1		1	0		0	0		1
Taper Length (m)	50.0			30.0			30.0			30.0		
Lane Util. Factor	0.97	0.95	1.00	1.00	0.95	1.00	1.00	1.00	1.00	1.00	1.00	0.88
Frt			0.850			0.850		0.969				0.850
Flt Protected	0.950			0.950				0.989			0.965	
Satd. Flow (prot)	3148	3318	1452	1623	3318	1452	0	1729	0	0	1648	2613
Flt Permitted	0.950			0.950				0.931			0.783	
Satd. Flow (perm)	3148	3318	1452	1623	3318	1452	0	1627	0	0	1337	2613
Right Turn on Red			Yes			No			Yes			Yes
Satd. Flow (RTOR)			140					6				327
Link Speed (k/h)		100			100			80			80	
Link Distance (m)		239.4			250.6			200.1			259.6	
Travel Time (s)		8.6			9.0			9.0			11.7	
Peak Hour Factor	0.85	0.85	0.85	0.85	0.85	0.85	0.85	0.85	0.85	0.85	0.85	0.85
Adj. Flow (vph)	827	1266	6	6	480	126	6	14	6	16	6	66
Shared Lane Traffic (%)												
Lane Group Flow (vph)	827	1266	6	6	480	126	0	26	0	0	22	66
Turn Type	Prot	NA	Perm	Prot	NA	custom	Perm	NA		Perm	NA	Free
Protected Phases	5	2		1				8			4	
Permitted Phases			2		6	6	8			4		Free
Detector Phase	5	2	2	1	6	6	8	8		4	4	
Switch Phase												
Minimum Initial (s)	15.0	15.0	15.0	10.0	15.0	15.0	10.0	10.0		10.0	10.0	
Minimum Split (s)	21.0	21.0	21.0	16.0	21.0	21.0	21.0	21.0		16.0	16.0	
Total Split (s)	28.0	33.0	33.0	16.0	21.0	21.0	21.0	21.0		21.0	21.0	
Total Split (%)	40.0%	47.1%	47.1%	22.9%	30.0%	30.0%	30.0%	30.0%		30.0%	30.0%	
Yellow Time (s)	5.0	5.0	5.0	5.0	5.0	5.0	5.0	5.0		5.0	5.0	
All-Red Time (s)	1.0	1.0	1.0	1.0	1.0	1.0	1.0	1.0		1.0	1.0	
Lost Time Adjust (s)	0.0	0.0	0.0	0.0	0.0	0.0		0.0			0.0	
Total Lost Time (s)	6.0	6.0	6.0	6.0	6.0	6.0		6.0			6.0	
Lead/Lag	Lead	Lag	Lag	Lead	Lag	Lag						
Lead-Lag Optimize?	Yes	Yes	Yes	Yes	Yes	Yes						
Recall Mode	None	C-Max	C-Max	None	Max	Max	Min	Min		Min	Min	
Act Effct Green (s)	23.4	44.8	44.8	10.0	18.6	18.6		10.0			10.0	70.0
Actuated g/C Ratio	0.33	0.64	0.64	0.14	0.27	0.27		0.14			0.14	1.00
v/c Ratio	0.78	0.60	0.01	0.03	0.55	0.33		0.11			0.12	0.03
Control Delay	26.6	10.6	0.0	26.2	25.9	25.2		23.2			27.9	0.0
Queue Delay	0.0	0.0	0.0	0.0	0.0	0.0		0.0			0.0	0.0
Total Delay	26.6	10.6	0.0	26.2	25.9	25.2		23.2			27.9	0.0
LOS	C	B	A	C	C	C		C			C	A
Approach Delay		16.9			25.7			23.2			7.0	
Approach LOS		B			C			C			A	

Intersection Summary

Area Type:	Other		
Cycle Length: 70			
Actuated Cycle Length: 70			
Offset: 0 (0%), Referenced to phase 2:EBT, Start of Green			
Natural Cycle: 70			
Control Type: Actuated-Coordinated			
Maximum v/c Ratio: 0.78			
Intersection Signal Delay: 18.5		Intersection LOS: B	
Intersection Capacity Utilization 61.4%		ICU Level of Service B	
Analysis Period (min) 15			

Splits and Phases: 1: RR 220 & Hwy 15:06

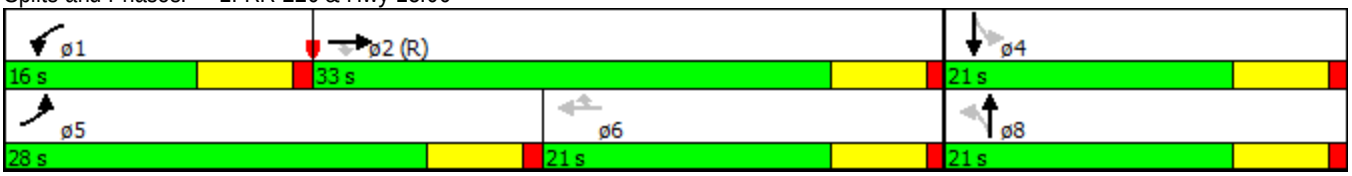

Lane Group	NBL	NBT	NBR	SBL	SBT	SBR	NEL	NET	NER	SWL	SWT	SWR
Lane Configurations												
Volume (vph)	5	312	82	10	19	89	733	403	5	53	316	63
Ideal Flow (vphpl)	1900	1900	1900	1900	1900	1900	1900	1900	1900	1900	1900	1900
Lane Width (m)	3.7	3.7	3.7	3.7	3.7	3.7	3.5	3.7	3.7	3.7	3.7	3.7
Storage Length (m)	0.0		0.0	0.0		60.0	0.0		240.0	220.0		250.0
Storage Lanes	0		0	0		1	2		1	1		1
Taper Length (m)	30.0			30.0			30.0			30.0		
Lane Util. Factor	1.00	1.00	1.00	1.00	1.00	0.88	0.97	0.95	1.00	1.00	0.95	1.00
Frt		0.972				0.850			0.850			0.850
Flt Protected					0.983		0.950			0.950		
Satd. Flow (prot)	0	1698	0	0	1717	2613	3148	3318	1484	1659	3318	1484
Flt Permitted		0.999			0.861		0.950			0.950		
Satd. Flow (perm)	0	1696	0	0	1504	2613	3148	3318	1484	1659	3318	1484
Right Turn on Red			Yes			Yes			Yes			Yes
Satd. Flow (RTOR)		14				229			98			164
Link Speed (k/h)		80			80			100			100	
Link Distance (m)		351.2			170.9			250.3			253.4	
Travel Time (s)		15.8			7.7			9.0			9.1	
Peak Hour Factor	0.85	0.85	0.85	0.85	0.85	0.85	0.85	0.85	0.85	0.85	0.85	0.85
Growth Factor	50%	100%	100%	100%	100%	100%	100%	100%	100%	100%	100%	100%
Adj. Flow (vph)	3	367	96	12	22	105	862	474	6	62	372	74
Shared Lane Traffic (%)												
Lane Group Flow (vph)	0	466	0	0	34	105	862	474	6	62	372	74
Turn Type	Perm	NA		Perm	NA	Free	Prot	NA	Perm	Prot	NA	Perm
Protected Phases		2			6		7	4		3	8	
Permitted Phases	2			6		Free			4			8
Detector Phase	2	2		6	6		7	4	4	3	8	8
Switch Phase												
Minimum Initial (s)	10.0	10.0		10.0	10.0		15.0	15.0	15.0	10.0	15.0	15.0
Minimum Split (s)	16.0	16.0		16.0	16.0		21.0	21.0	21.0	16.0	21.0	21.0
Total Split (s)	38.0	38.0		38.0	38.0		39.0	46.0	46.0	16.0	23.0	23.0
Total Split (%)	38.0%	38.0%		38.0%	38.0%		39.0%	46.0%	46.0%	16.0%	23.0%	23.0%
Yellow Time (s)	5.0	5.0		5.0	5.0		5.0	5.0	5.0	5.0	5.0	5.0
All-Red Time (s)	1.0	1.0		1.0	1.0		1.0	1.0	1.0	1.0	1.0	1.0
Lost Time Adjust (s)		-1.0			-1.0		0.0	0.0	0.0	-1.0	0.0	0.0
Total Lost Time (s)		5.0			5.0		6.0	6.0	6.0	5.0	6.0	6.0
Lead/Lag							Lead	Lag	Lag	Lead	Lag	Lag
Lead-Lag Optimize?							Yes	Yes	Yes	Yes		
Recall Mode	None	None		Max	Max		Max	C-Max	C-Max	None	None	None
Act Effct Green (s)		33.0			33.0	100.0	33.0	43.2	43.2	11.0	17.0	17.0
Actuated g/C Ratio		0.33			0.33	1.00	0.33	0.43	0.43	0.11	0.17	0.17
v/c Ratio		0.82			0.07	0.04	0.83	0.33	0.01	0.34	0.66	0.19
Control Delay		43.3			23.6	0.0	39.2	20.7	0.0	46.9	45.1	1.1
Queue Delay		0.0			0.0	0.0	0.0	0.0	0.0	0.0	0.0	0.0
Total Delay		43.3			23.6	0.0	39.2	20.7	0.0	46.9	45.1	1.1
LOS		D			C	A	D	C	A	D	D	A
Approach Delay		43.3			5.8			32.5			38.9	
Approach LOS		D			A			C			D	

Intersection Summary

Area Type:	Other		
Cycle Length: 100			
Actuated Cycle Length: 100			
Offset: 0 (0%), Referenced to phase 4:NET, Start of Green			
Natural Cycle: 80			
Control Type: Actuated-Coordinated			
Maximum v/c Ratio: 0.83			
Intersection Signal Delay: 34.4		Intersection LOS: C	
Intersection Capacity Utilization 71.0%		ICU Level of Service C	
Analysis Period (min) 15			

Splits and Phases: 2: Hwy 15:06 & Hwy 830/RR 214

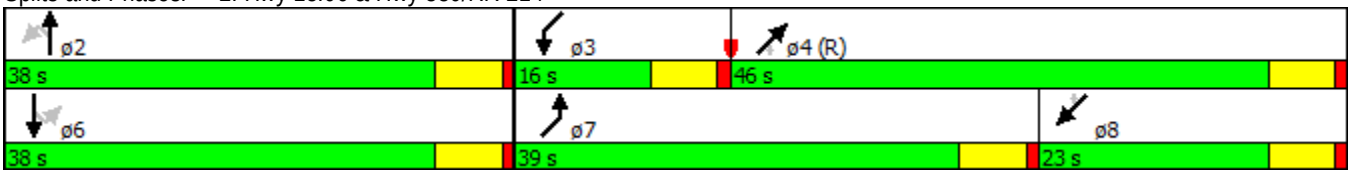

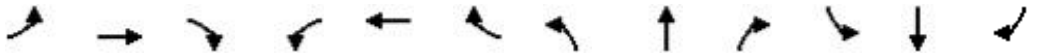

Lane Group	EBL	EBT	EBR	WBL	WBT	WBR	NBL	NBT	NBR	SBL	SBT	SBR
Lane Configurations												
Volume (vph)	74	592	5	5	1216	12	5	5	5	106	12	635
Ideal Flow (vphpl)	1900	1900	1900	1900	1900	1900	1900	1900	1900	1900	1900	1900
Lane Width (m)	3.5	3.7	3.5	3.5	3.7	3.5	4.0	4.0	4.0	3.5	3.5	3.7
Storage Length (m)	0.0		87.5	200.0		0.0	0.0		0.0	0.0		60.0
Storage Lanes	2		1	1		1	0		0	0		1
Taper Length (m)	50.0			30.0			30.0			30.0		
Lane Util. Factor	0.97	0.95	1.00	1.00	0.95	1.00	1.00	1.00	1.00	1.00	1.00	0.88
Frt			0.850			0.850		0.955				0.850
Flt Protected	0.950			0.950				0.984			0.957	
Satd. Flow (prot)	3148	3318	1452	1623	3318	1452	0	1695	0	0	1635	2613
Flt Permitted	0.950			0.950				0.889			0.735	
Satd. Flow (perm)	3148	3318	1452	1623	3318	1452	0	1532	0	0	1255	2613
Right Turn on Red			Yes			No			Yes			Yes
Satd. Flow (RTOR)			123					6				747
Link Speed (k/h)		100			100			80			80	
Link Distance (m)		239.4			250.6			200.1			259.6	
Travel Time (s)		8.6			9.0			9.0			11.7	
Peak Hour Factor	0.85	0.85	0.85	0.85	0.85	0.85	0.85	0.85	0.85	0.85	0.85	0.85
Adj. Flow (vph)	87	696	6	6	1431	14	6	6	6	125	14	747
Shared Lane Traffic (%)												
Lane Group Flow (vph)	87	696	6	6	1431	14	0	18	0	0	139	747
Turn Type	Prot	NA	Perm	Prot	NA	custom	Perm	NA		Perm	NA	Free
Protected Phases	5	2		1				8			4	
Permitted Phases			2		6	6	8			4		Free
Detector Phase	5	2	2	1	6	6	8	8		4	4	
Switch Phase												
Minimum Initial (s)	10.0	15.0	15.0	10.0	15.0	15.0	10.0	10.0		10.0	10.0	
Minimum Split (s)	21.0	21.0	21.0	16.0	21.0	21.0	21.0	21.0		16.0	16.0	
Total Split (s)	21.0	38.0	38.0	21.0	38.0	38.0	21.0	21.0		21.0	21.0	
Total Split (%)	26.3%	47.5%	47.5%	26.3%	47.5%	47.5%	26.3%	26.3%		26.3%	26.3%	
Yellow Time (s)	5.0	5.0	5.0	5.0	5.0	5.0	5.0	5.0		5.0	5.0	
All-Red Time (s)	1.0	1.0	1.0	1.0	1.0	1.0	1.0	1.0		1.0	1.0	
Lost Time Adjust (s)	0.0	0.0	0.0	0.0	0.0	0.0		0.0			0.0	
Total Lost Time (s)	6.0	6.0	6.0	6.0	6.0	6.0		6.0			6.0	
Lead/Lag	Lead	Lag	Lag	Lead	Lag	Lag						
Lead-Lag Optimize?	Yes	Yes	Yes	Yes	Yes	Yes						
Recall Mode	None	C-Max	C-Max	None	Max	Max	Min	Min		Min	Min	
Act Effct Green (s)	10.0	51.7	51.7	10.0	42.1	42.1		13.1			13.1	80.0
Actuated g/C Ratio	0.12	0.65	0.65	0.12	0.53	0.53		0.16			0.16	1.00
v/c Ratio	0.22	0.32	0.01	0.03	0.82	0.02		0.07			0.68	0.29
Control Delay	33.1	8.3	0.0	45.0	19.7	6.9		22.4			48.2	0.3
Queue Delay	0.0	0.0	0.0	0.0	0.0	0.0		0.0			0.0	0.0
Total Delay	33.1	8.3	0.0	45.0	19.7	6.9		22.4			48.2	0.3
LOS	C	A	A	D	B	A		C			D	A
Approach Delay		11.0			19.7			22.4			7.8	
Approach LOS		B			B			C			A	

Intersection Summary

Area Type:	Other		
Cycle Length: 80			
Actuated Cycle Length: 80			
Offset: 0 (0%), Referenced to phase 2:EBT, Start of Green			
Natural Cycle: 80			
Control Type: Actuated-Coordinated			
Maximum v/c Ratio: 0.82			
Intersection Signal Delay: 14.2		Intersection LOS: B	
Intersection Capacity Utilization 56.8%		ICU Level of Service B	
Analysis Period (min) 15			

Splits and Phases: 1: RR 220 & Hwy 15:06

Lane Group	NBL	NBT	NBR	SBL	SBT	SBR	NEL	NET	NER	SWL	SWT	SWR
Lane Configurations												
Volume (vph)	5	30	74	70	342	613	122	464	7	151	532	4
Ideal Flow (vphpl)	1900	1900	1900	1900	1900	1900	1900	1900	1900	1900	1900	1900
Lane Width (m)	3.7	3.7	3.7	3.7	3.7	3.7	3.5	3.7	3.7	3.7	3.7	3.7
Storage Length (m)	0.0		0.0	0.0		60.0	0.0		240.0	220.0		250.0
Storage Lanes	0		0	0		1	2		1	1		1
Taper Length (m)	30.0			30.0			30.0			30.0		
Lane Util. Factor	1.00	1.00	1.00	1.00	1.00	0.88	0.97	0.95	1.00	1.00	0.95	1.00
Frt		0.906				0.850			0.850			0.850
Flt Protected		0.999			0.992		0.950			0.950		
Satd. Flow (prot)	0	1581	0	0	1732	2613	3148	3318	1484	1659	3318	1484
Flt Permitted		0.990			0.921		0.950			0.950		
Satd. Flow (perm)	0	1566	0	0	1608	2613	3148	3318	1484	1659	3318	1484
Right Turn on Red			Yes			Yes			Yes			Yes
Satd. Flow (RTOR)		87				721			123			123
Link Speed (k/h)		80			80			100			100	
Link Distance (m)		351.2			170.9			250.3			253.4	
Travel Time (s)		15.8			7.7			9.0			9.1	
Peak Hour Factor	0.85	0.85	0.85	0.85	0.85	0.85	0.85	0.85	0.85	0.85	0.85	0.85
Growth Factor	50%	100%	100%	100%	100%	100%	100%	100%	100%	100%	100%	100%
Adj. Flow (vph)	3	35	87	82	402	721	144	546	8	178	626	5
Shared Lane Traffic (%)												
Lane Group Flow (vph)	0	125	0	0	484	721	144	546	8	178	626	5
Turn Type	Perm	NA		Perm	NA	Free	Prot	NA	Perm	Prot	NA	Perm
Protected Phases		2			6		7	4		3	8	
Permitted Phases	2			6		Free			4			8
Detector Phase	2	2		6	6		7	4	4	3	8	8
Switch Phase												
Minimum Initial (s)	10.0	10.0		10.0	10.0		10.0	15.0	15.0	10.0	15.0	15.0
Minimum Split (s)	16.0	16.0		16.0	16.0		21.0	21.0	21.0	16.0	21.0	21.0
Total Split (s)	34.0	34.0		34.0	34.0		21.0	25.0	25.0	21.0	25.0	25.0
Total Split (%)	42.5%	42.5%		42.5%	42.5%		26.3%	31.3%	31.3%	26.3%	31.3%	31.3%
Yellow Time (s)	5.0	5.0		5.0	5.0		5.0	5.0	5.0	5.0	5.0	5.0
All-Red Time (s)	1.0	1.0		1.0	1.0		1.0	1.0	1.0	1.0	1.0	1.0
Lost Time Adjust (s)		-1.0			-1.0		0.0	0.0	0.0	-1.0	0.0	0.0
Total Lost Time (s)		5.0			5.0		6.0	6.0	6.0	5.0	6.0	6.0
Lead/Lag							Lead	Lag	Lag	Lead	Lag	Lag
Lead-Lag Optimize?							Yes	Yes	Yes	Yes		
Recall Mode	None	None		Max	Max		Max	C-Max	C-Max	None	None	None
Act Effct Green (s)		29.0			29.0	80.0	15.0	20.9	20.9	14.1	19.0	19.0
Actuated g/C Ratio		0.36			0.36	1.00	0.19	0.26	0.26	0.18	0.24	0.24
v/c Ratio		0.20			0.83	0.28	0.24	0.63	0.02	0.61	0.79	0.01
Control Delay		7.7			37.9	0.3	28.6	27.1	0.0	39.7	37.5	0.0
Queue Delay		0.0			0.0	0.0	0.0	0.0	0.0	0.0	0.0	0.0
Total Delay		7.7			37.9	0.3	28.6	27.1	0.0	39.7	37.5	0.0
LOS		A			D	A	C	C	A	D	D	A
Approach Delay		7.7			15.4			27.1			37.8	
Approach LOS		A			B			C			D	

Intersection Summary

Area Type:	Other		
Cycle Length: 80			
Actuated Cycle Length: 80			
Offset: 0 (0%), Referenced to phase 4:NET, Start of Green			
Natural Cycle: 75			
Control Type: Actuated-Coordinated			
Maximum v/c Ratio: 0.83			
Intersection Signal Delay: 24.3		Intersection LOS: C	
Intersection Capacity Utilization 65.7%		ICU Level of Service C	
Analysis Period (min) 15			

Splits and Phases: 2: Hwy 15:06 & Hwy 830/RR 214

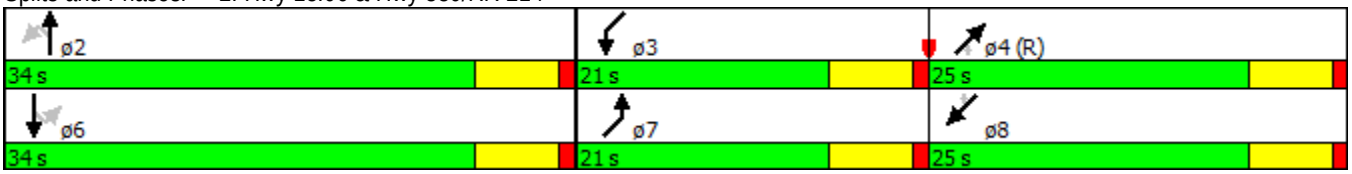

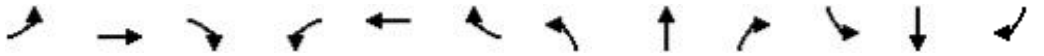

Lane Group	EBL	EBT	EBR	WBL	WBT	WBR	NBL	NBT	NBR	SBL	SBT	SBR
Lane Configurations												
Volume (vph)	748	1106	5	5	433	118	5	12	5	15	5	62
Ideal Flow (vphpl)	1900	1900	1900	1900	1900	1900	1900	1900	1900	1900	1900	1900
Lane Width (m)	3.5	3.7	3.5	3.5	3.7	3.5	4.0	4.0	4.0	3.5	3.5	3.7
Storage Length (m)	0.0		87.5	200.0		0.0	0.0		0.0	0.0		60.0
Storage Lanes	2		1	1		1	0		0	0		1
Taper Length (m)	50.0			30.0			30.0			30.0		
Lane Util. Factor	0.97	0.95	1.00	1.00	0.95	1.00	1.00	1.00	1.00	1.00	1.00	0.88
Frt			0.850			0.850		0.969				0.850
Flt Protected	0.950			0.950				0.989			0.964	
Satd. Flow (prot)	3148	3318	1452	1623	3318	1452	0	1729	0	0	1647	2613
Flt Permitted	0.950			0.950				0.931			0.773	
Satd. Flow (perm)	3148	3318	1452	1623	3318	1452	0	1627	0	0	1320	2613
Right Turn on Red			Yes			No			Yes			Yes
Satd. Flow (RTOR)			140					6				327
Link Speed (k/h)		100			100			80			80	
Link Distance (m)		239.4			250.6			200.1			259.6	
Travel Time (s)		8.6			9.0			9.0			11.7	
Peak Hour Factor	0.85	0.85	0.85	0.85	0.85	0.85	0.85	0.85	0.85	0.85	0.85	0.85
Adj. Flow (vph)	880	1301	6	6	509	139	6	14	6	18	6	73
Shared Lane Traffic (%)												
Lane Group Flow (vph)	880	1301	6	6	509	139	0	26	0	0	24	73
Turn Type	Prot	NA	Perm	Prot	NA	custom	Perm	NA		Perm	NA	Free
Protected Phases	5	2		1				8			4	
Permitted Phases			2		6	6	8			4		Free
Detector Phase	5	2	2	1	6	6	8	8		4	4	
Switch Phase												
Minimum Initial (s)	10.0	15.0	15.0	10.0	15.0	15.0	10.0	10.0		10.0	10.0	
Minimum Split (s)	21.0	21.0	21.0	16.0	21.0	21.0	21.0	21.0		16.0	16.0	
Total Split (s)	28.0	33.0	33.0	16.0	21.0	21.0	21.0	21.0		21.0	21.0	
Total Split (%)	40.0%	47.1%	47.1%	22.9%	30.0%	30.0%	30.0%	30.0%		30.0%	30.0%	
Yellow Time (s)	5.0	5.0	5.0	5.0	5.0	5.0	5.0	5.0		5.0	5.0	
All-Red Time (s)	1.0	1.0	1.0	1.0	1.0	1.0	1.0	1.0		1.0	1.0	
Lost Time Adjust (s)	0.0	0.0	0.0	0.0	0.0	0.0		0.0			0.0	
Total Lost Time (s)	6.0	6.0	6.0	6.0	6.0	6.0		6.0			6.0	
Lead/Lag	Lead	Lag	Lag	Lead	Lag	Lag						
Lead-Lag Optimize?	Yes	Yes	Yes	Yes	Yes	Yes						
Recall Mode	None	C-Max	C-Max	None	Max	Max	Min	Min		Min	Min	
Act Effct Green (s)	24.5	44.8	44.8	10.0	17.5	17.5		10.0			10.0	70.0
Actuated g/C Ratio	0.35	0.64	0.64	0.14	0.25	0.25		0.14			0.14	1.00
v/c Ratio	0.80	0.61	0.01	0.03	0.61	0.38		0.11			0.13	0.03
Control Delay	26.5	11.0	0.0	26.2	27.9	26.8		23.2			28.1	0.0
Queue Delay	0.0	0.0	0.0	0.0	0.0	0.0		0.0			0.0	0.0
Total Delay	26.5	11.0	0.0	26.2	27.9	26.8		23.2			28.1	0.0
LOS	C	B	A	C	C	C		C			C	A
Approach Delay		17.2			27.6			23.2			7.0	
Approach LOS		B			C			C			A	

Intersection Summary

Area Type:	Other		
Cycle Length: 70			
Actuated Cycle Length: 70			
Offset: 0 (0%), Referenced to phase 2:EBT, Start of Green			
Natural Cycle: 70			
Control Type: Actuated-Coordinated			
Maximum v/c Ratio: 0.80			
Intersection Signal Delay: 19.2		Intersection LOS: B	
Intersection Capacity Utilization 62.2%		ICU Level of Service B	
Analysis Period (min) 15			

Splits and Phases: 1: RR 220 & Hwy 15:06

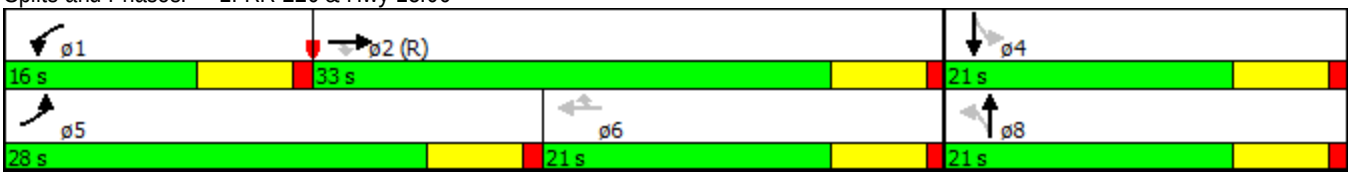

Lane Group	NBL	NBT	NBR	SBL	SBT	SBR	NEL	NET	NER	SWL	SWT	SWR
Lane Configurations												
Volume (vph)	5	322	88	10	19	92	763	433	5	57	340	65
Ideal Flow (vphpl)	1900	1900	1900	1900	1900	1900	1900	1900	1900	1900	1900	1900
Lane Width (m)	3.7	3.7	3.7	3.7	3.7	3.7	3.5	3.7	3.7	3.7	3.7	3.7
Storage Length (m)	0.0		0.0	0.0		60.0	0.0		240.0	220.0		250.0
Storage Lanes	0		0	0		1	2		1	1		1
Taper Length (m)	30.0			30.0			30.0			30.0		
Lane Util. Factor	1.00	1.00	1.00	1.00	1.00	0.88	0.97	0.95	1.00	1.00	0.95	1.00
Frt		0.971				0.850			0.850			0.850
Flt Protected					0.983		0.950			0.950		
Satd. Flow (prot)	0	1696	0	0	1717	2613	3148	3318	1484	1659	3318	1484
Flt Permitted		0.999			0.855		0.950			0.950		
Satd. Flow (perm)	0	1694	0	0	1493	2613	3148	3318	1484	1659	3318	1484
Right Turn on Red			Yes			Yes			Yes			Yes
Satd. Flow (RTOR)		15				229			98			164
Link Speed (k/h)		80			80			100			100	
Link Distance (m)		351.2			170.9			250.3			253.4	
Travel Time (s)		15.8			7.7			9.0			9.1	
Peak Hour Factor	0.85	0.85	0.85	0.85	0.85	0.85	0.85	0.85	0.85	0.85	0.85	0.85
Growth Factor	50%	100%	100%	100%	100%	100%	100%	100%	100%	100%	100%	100%
Adj. Flow (vph)	3	379	104	12	22	108	898	509	6	67	400	76
Shared Lane Traffic (%)												
Lane Group Flow (vph)	0	486	0	0	34	108	898	509	6	67	400	76
Turn Type	Perm	NA		Perm	NA	Free	Prot	NA	Perm	Prot	NA	Perm
Protected Phases		2			6		7	4		3	8	
Permitted Phases	2			6		Free			4			8
Detector Phase	2	2		6	6		7	4	4	3	8	8
Switch Phase												
Minimum Initial (s)	10.0	10.0		10.0	10.0		10.0	15.0	15.0	10.0	15.0	15.0
Minimum Split (s)	16.0	16.0		16.0	16.0		21.0	21.0	21.0	16.0	21.0	21.0
Total Split (s)	38.0	38.0		38.0	38.0		39.0	46.0	46.0	16.0	23.0	23.0
Total Split (%)	38.0%	38.0%		38.0%	38.0%		39.0%	46.0%	46.0%	16.0%	23.0%	23.0%
Yellow Time (s)	5.0	5.0		5.0	5.0		5.0	5.0	5.0	5.0	5.0	5.0
All-Red Time (s)	1.0	1.0		1.0	1.0		1.0	1.0	1.0	1.0	1.0	1.0
Lost Time Adjust (s)		-1.0			-1.0		0.0	0.0	0.0	-1.0	0.0	0.0
Total Lost Time (s)		5.0			5.0		6.0	6.0	6.0	5.0	6.0	6.0
Lead/Lag							Lead	Lag	Lag	Lead	Lag	Lag
Lead-Lag Optimize?							Yes	Yes	Yes	Yes		
Recall Mode	None	None		Max	Max		Max	C-Max	C-Max	None	None	None
Act Effct Green (s)		33.0			33.0	100.0	33.0	43.2	43.2	11.0	17.0	17.0
Actuated g/C Ratio		0.33			0.33	1.00	0.33	0.43	0.43	0.11	0.17	0.17
v/c Ratio		0.85			0.07	0.04	0.87	0.36	0.01	0.37	0.71	0.20
Control Delay		46.5			23.6	0.0	41.7	21.0	0.0	47.6	46.9	1.1
Queue Delay		0.0			0.0	0.0	0.0	0.0	0.0	0.0	0.0	0.0
Total Delay		46.5			23.6	0.0	41.7	21.0	0.0	47.6	46.9	1.1
LOS		D			C	A	D	C	A	D	D	A
Approach Delay		46.5			5.7			34.1			40.6	
Approach LOS		D			A			C			D	

Intersection Summary

Area Type:	Other	
Cycle Length: 100		
Actuated Cycle Length: 100		
Offset: 0 (0%), Referenced to phase 4:NET, Start of Green		
Natural Cycle: 90		
Control Type: Actuated-Coordinated		
Maximum v/c Ratio: 0.87		
Intersection Signal Delay: 36.2		Intersection LOS: D
Intersection Capacity Utilization 72.8%		ICU Level of Service C
Analysis Period (min) 15		

Splits and Phases: 2: Hwy 15:06 & Hwy 830/RR 214

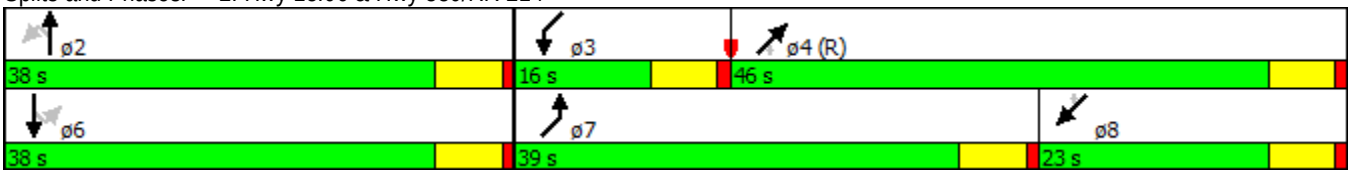

Lane Group	EBL	EBT	EBR	WBL	WBT	WBR	NBL	NBT	NBR	SBL	SBT	SBR
Lane Configurations												
Volume (vph)	80	628	5	5	1266	14	5	5	5	117	12	680
Ideal Flow (vphpl)	1900	1900	1900	1900	1900	1900	1900	1900	1900	1900	1900	1900
Lane Width (m)	3.5	3.7	3.5	3.5	3.7	3.5	4.0	4.0	4.0	3.5	3.5	3.7
Storage Length (m)	0.0		87.5	200.0		0.0	0.0		0.0	0.0		60.0
Storage Lanes	2		1	1		1	0		0	0		1
Taper Length (m)	50.0			30.0			30.0			30.0		
Lane Util. Factor	0.97	0.95	1.00	1.00	0.95	1.00	1.00	1.00	1.00	1.00	1.00	0.88
Frt			0.850			0.850		0.955				0.850
Flt Protected	0.950			0.950				0.984			0.957	
Satd. Flow (prot)	3148	3318	1452	1623	3318	1452	0	1695	0	0	1635	2613
Flt Permitted	0.950			0.950				0.903			0.733	
Satd. Flow (perm)	3148	3318	1452	1623	3318	1452	0	1556	0	0	1252	2613
Right Turn on Red			Yes			No			Yes			Yes
Satd. Flow (RTOR)			164					6				800
Link Speed (k/h)		100			100			80			80	
Link Distance (m)		239.4			250.6			200.1			259.6	
Travel Time (s)		8.6			9.0			9.0			11.7	
Peak Hour Factor	0.85	0.85	0.85	0.85	0.85	0.85	0.85	0.85	0.85	0.85	0.85	0.85
Adj. Flow (vph)	94	739	6	6	1489	16	6	6	6	138	14	800
Shared Lane Traffic (%)												
Lane Group Flow (vph)	94	739	6	6	1489	16	0	18	0	0	152	800
Turn Type	Prot	NA	Perm	Prot	NA	custom	Perm	NA		pm+pt	NA	Free
Protected Phases	5	2		1				8		7	4	
Permitted Phases			2		6	6	8			4		Free
Detector Phase	5	2	2	1	6	6	8	8		7	4	
Switch Phase												
Minimum Initial (s)	10.0	15.0	15.0	10.0	15.0	15.0	10.0	10.0		7.0	10.0	
Minimum Split (s)	21.0	21.0	21.0	16.0	21.0	21.0	21.0	21.0		13.0	16.0	
Total Split (s)	21.0	50.0	50.0	16.0	45.0	45.0	21.0	21.0		13.0	34.0	
Total Split (%)	21.0%	50.0%	50.0%	16.0%	45.0%	45.0%	21.0%	21.0%		13.0%	34.0%	
Yellow Time (s)	5.0	5.0	5.0	5.0	5.0	5.0	5.0	5.0		5.0	5.0	
All-Red Time (s)	1.0	1.0	1.0	1.0	1.0	1.0	1.0	1.0		1.0	1.0	
Lost Time Adjust (s)	0.0	0.0	0.0	0.0	0.0	0.0		0.0			0.0	
Total Lost Time (s)	6.0	6.0	6.0	6.0	6.0	6.0		6.0			6.0	
Lead/Lag	Lead	Lag	Lag	Lead	Lag	Lag	Lag	Lag		Lead		
Lead-Lag Optimize?	Yes	Yes	Yes	Yes	Yes	Yes	Yes	Yes		Yes		
Recall Mode	None	C-Max	C-Max	None	Max	Max	Min	Min		None	Min	
Act Effct Green (s)	10.1	66.3	66.3	10.0	56.5	56.5		18.5			18.5	100.0
Actuated g/C Ratio	0.10	0.66	0.66	0.10	0.56	0.56		0.18			0.18	1.00
v/c Ratio	0.30	0.34	0.01	0.04	0.79	0.02		0.06			0.66	0.31
Control Delay	44.2	9.9	0.0	41.4	24.2	13.9		23.5			50.1	0.3
Queue Delay	0.0	0.0	0.0	0.0	0.0	0.0		0.0			0.0	0.0
Total Delay	44.2	9.9	0.0	41.4	24.2	13.9		23.5			50.1	0.3
LOS	D	A	A	D	C	B		C			D	A
Approach Delay		13.7			24.2			23.5			8.3	
Approach LOS		B			C			C			A	

Intersection Summary

Area Type:	Other		
Cycle Length: 100			
Actuated Cycle Length: 100			
Offset: 0 (0%), Referenced to phase 2:EBT, Start of Green			
Natural Cycle: 100			
Control Type: Actuated-Coordinated			
Maximum v/c Ratio: 0.79			
Intersection Signal Delay: 17.0		Intersection LOS: B	
Intersection Capacity Utilization 58.8%		ICU Level of Service B	
Analysis Period (min) 15			

Splits and Phases: 1: RR 220 & Hwy 15:06

Lane Group	NBL	NBT	NBR	SBL	SBT	SBR	NEL	NET	NER	SWL	SWT	SWR
Lane Configurations												
Volume (vph)	5	31	80	72	352	643	125	500	7	162	573	5
Ideal Flow (vphpl)	1900	1900	1900	1900	1900	1900	1900	1900	1900	1900	1900	1900
Lane Width (m)	3.7	3.7	3.7	3.7	3.7	3.7	3.5	3.7	3.7	3.7	3.7	3.7
Storage Length (m)	0.0		0.0	0.0		60.0	0.0		240.0	220.0		250.0
Storage Lanes	0		0	0		1	2		1	1		1
Taper Length (m)	30.0			30.0			30.0			30.0		
Lane Util. Factor	1.00	1.00	1.00	1.00	1.00	0.88	0.97	0.95	1.00	1.00	0.95	1.00
Frt		0.905				0.850			0.850			0.850
Flt Protected		0.999			0.992		0.950			0.950		
Satd. Flow (prot)	0	1579	0	0	1732	2613	3148	3318	1484	1659	3318	1484
Flt Permitted		0.990			0.919		0.950			0.950		
Satd. Flow (perm)	0	1565	0	0	1605	2613	3148	3318	1484	1659	3318	1484
Right Turn on Red			Yes			Yes			Yes			Yes
Satd. Flow (RTOR)		94				756			131			131
Link Speed (k/h)		80			80			100			100	
Link Distance (m)		351.2			170.9			250.3			253.4	
Travel Time (s)		15.8			7.7			9.0			9.1	
Peak Hour Factor	0.85	0.85	0.85	0.85	0.85	0.85	0.85	0.85	0.85	0.85	0.85	0.85
Growth Factor	50%	100%	100%	100%	100%	100%	100%	100%	100%	100%	100%	100%
Adj. Flow (vph)	3	36	94	85	414	756	147	588	8	191	674	6
Shared Lane Traffic (%)												
Lane Group Flow (vph)	0	133	0	0	499	756	147	588	8	191	674	6
Turn Type	Perm	NA		Perm	NA	Free	Prot	NA	Perm	Prot	NA	Perm
Protected Phases		2			6		7	4		3	8	
Permitted Phases	2			6		Free			4			8
Detector Phase	2	2		6	6		7	4	4	3	8	8
Switch Phase												
Minimum Initial (s)	10.0	10.0		10.0	10.0		10.0	15.0	15.0	10.0	15.0	15.0
Minimum Split (s)	16.0	16.0		16.0	16.0		16.0	21.0	21.0	16.0	21.0	21.0
Total Split (s)	34.0	34.0		34.0	34.0		17.0	24.0	24.0	17.0	24.0	24.0
Total Split (%)	45.3%	45.3%		45.3%	45.3%		22.7%	32.0%	32.0%	22.7%	32.0%	32.0%
Yellow Time (s)	5.0	5.0		5.0	5.0		5.0	5.0	5.0	5.0	5.0	5.0
All-Red Time (s)	1.0	1.0		1.0	1.0		1.0	1.0	1.0	1.0	1.0	1.0
Lost Time Adjust (s)		-1.0			-1.0		0.0	0.0	0.0	-1.0	0.0	0.0
Total Lost Time (s)		5.0			5.0		6.0	6.0	6.0	5.0	6.0	6.0
Lead/Lag							Lead	Lag	Lag	Lead	Lag	Lag
Lead-Lag Optimize?							Yes	Yes	Yes	Yes		
Recall Mode	None	None		Max	Max		Max	C-Max	C-Max	None	None	None
Act Effct Green (s)		29.0			29.0	75.0	11.0	18.2	18.2	11.8	18.0	18.0
Actuated g/C Ratio		0.39			0.39	1.00	0.15	0.24	0.24	0.16	0.24	0.24
v/c Ratio		0.20			0.80	0.29	0.32	0.73	0.02	0.73	0.85	0.01
Control Delay		6.7			32.7	0.3	30.8	32.5	0.0	48.5	39.1	0.0
Queue Delay		0.0			0.0	0.0	0.0	0.0	0.0	0.0	0.0	0.0
Total Delay		6.7			32.7	0.3	30.8	32.5	0.0	48.5	39.1	0.0
LOS		A			C	A	C	C	A	D	D	A
Approach Delay		6.7			13.2			31.8			40.9	
Approach LOS		A			B			C			D	

Intersection Summary

Area Type:	Other	
Cycle Length: 75		
Actuated Cycle Length: 75		
Offset: 0 (0%), Referenced to phase 4:NET, Start of Green		
Natural Cycle: 65		
Control Type: Actuated-Coordinated		
Maximum v/c Ratio: 0.85		
Intersection Signal Delay: 25.5		Intersection LOS: C
Intersection Capacity Utilization 67.5%		ICU Level of Service C
Analysis Period (min) 15		

Splits and Phases: 2: Hwy 15:06 & Hwy 830/RR 214

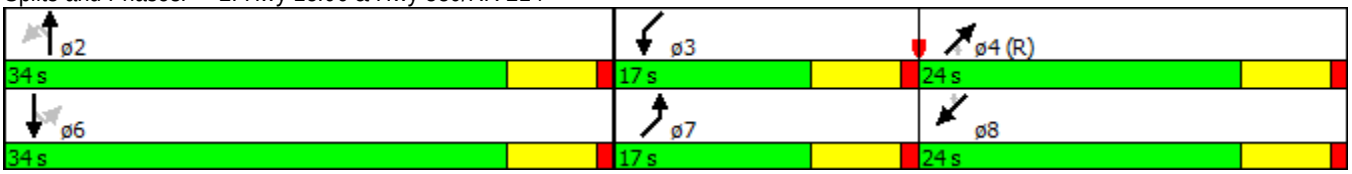

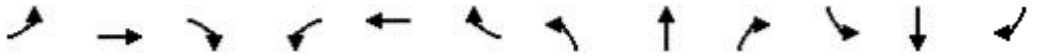

Lane Group	EBL	EBT	EBR	WBL	WBT	WBR	NBL	NBT	NBR	SBL	SBT	SBR
Lane Configurations												
Volume (vph)	664	1137	5	5	458	98	5	11	5	13	5	52
Ideal Flow (vphpl)	1900	1900	1900	1900	1900	1900	1900	1900	1900	1900	1900	1900
Lane Width (m)	3.5	3.7	3.5	3.5	3.7	3.5	4.0	4.0	4.0	3.5	3.5	3.7
Storage Length (m)	0.0		87.5	200.0		0.0	0.0		0.0	0.0		60.0
Storage Lanes	2		1	1		1	0		0	0		1
Taper Length (m)	50.0			30.0			30.0			30.0		
Lane Util. Factor	0.97	0.95	1.00	1.00	0.95	1.00	1.00	1.00	1.00	1.00	1.00	0.88
Frt			0.850			0.850		0.968				0.850
Flt Protected	0.950			0.950				0.988			0.966	
Satd. Flow (prot)	3148	3318	1452	1623	3318	1452	0	1725	0	0	1650	2613
Flt Permitted	0.950			0.950				0.928			0.786	
Satd. Flow (perm)	3148	3318	1452	1623	3318	1452	0	1621	0	0	1343	2613
Right Turn on Red			Yes			No			Yes			Yes
Satd. Flow (RTOR)			131					6				305
Link Speed (k/h)		100			100			80			80	
Link Distance (m)		239.4			250.6			200.1			259.6	
Travel Time (s)		8.6			9.0			9.0			11.7	
Peak Hour Factor	0.85	0.85	0.85	0.85	0.85	0.85	0.85	0.85	0.85	0.85	0.85	0.85
Adj. Flow (vph)	781	1338	6	6	539	115	6	13	6	15	6	61
Shared Lane Traffic (%)												
Lane Group Flow (vph)	781	1338	6	6	539	115	0	25	0	0	21	61
Turn Type	Prot	NA	Perm	Prot	NA	custom	Perm	NA		Perm	NA	Free
Protected Phases	5	2		1				8			4	
Permitted Phases			2		6	6	8			4		Free
Detector Phase	5	2	2	1	6	6	8	8		4	4	
Switch Phase												
Minimum Initial (s)	10.0	15.0	15.0	10.0	15.0	15.0	10.0	10.0		10.0	10.0	
Minimum Split (s)	21.0	21.0	21.0	16.0	21.0	21.0	21.0	21.0		16.0	16.0	
Total Split (s)	28.0	38.0	38.0	16.0	26.0	26.0	21.0	21.0		21.0	21.0	
Total Split (%)	37.3%	50.7%	50.7%	21.3%	34.7%	34.7%	28.0%	28.0%		28.0%	28.0%	
Maximum Green (s)	22.0	32.0	32.0	10.0	20.0	20.0	15.0	15.0		15.0	15.0	
Yellow Time (s)	5.0	5.0	5.0	5.0	5.0	5.0	5.0	5.0		5.0	5.0	
All-Red Time (s)	1.0	1.0	1.0	1.0	1.0	1.0	1.0	1.0		1.0	1.0	
Lost Time Adjust (s)	0.0	0.0	0.0	0.0	0.0	0.0		0.0			0.0	
Total Lost Time (s)	6.0	6.0	6.0	6.0	6.0	6.0		6.0			6.0	
Lead/Lag	Lead	Lag	Lag	Lead	Lag	Lag						
Lead-Lag Optimize?	Yes	Yes	Yes	Yes	Yes	Yes						
Vehicle Extension (s)	3.0	3.0	3.0	3.0	3.0	3.0	3.0	3.0		3.0	3.0	
Recall Mode	None	C-Max	C-Max	None	Max	Max	Min	Min		Min	Min	
Act Effct Green (s)	23.6	49.8	49.8	10.0	23.4	23.4		10.0			10.0	75.0
Actuated g/C Ratio	0.31	0.66	0.66	0.13	0.31	0.31		0.13			0.13	1.00
v/c Ratio	0.79	0.61	0.01	0.03	0.52	0.25		0.11			0.12	0.02
Control Delay	29.6	10.1	0.0	28.8	24.2	22.7		25.2			30.5	0.0
Queue Delay	0.0	0.0	0.0	0.0	0.0	0.0		0.0			0.0	0.0
Total Delay	29.6	10.1	0.0	28.8	24.2	22.7		25.2			30.5	0.0
LOS	C	B	A	C	C	C		C			C	A
Approach Delay		17.3			24.0			25.2			7.8	
Approach LOS		B			C			C			A	

Lane Group	EBL	EBT	EBR	WBL	WBT	WBR	NBL	NBT	NBR	SBL	SBT	SBR
Queue Length 50th (m)	51.2	39.8	0.0	0.8	32.7	12.1		2.4			2.7	0.0
Queue Length 95th (m)	60.7	96.5	0.0	3.7	46.8	24.2		8.3			8.1	0.0
Internal Link Dist (m)		215.4			226.6			176.1			235.6	
Turn Bay Length (m)			87.5	200.0								60.0
Base Capacity (vph)	1021	2202	1008	216	1036	453		329			268	2613
Starvation Cap Reductn	0	0	0	0	0	0		0			0	0
Spillback Cap Reductn	0	0	0	0	0	0		0			0	0
Storage Cap Reductn	0	0	0	0	0	0		0			0	0
Reduced v/c Ratio	0.76	0.61	0.01	0.03	0.52	0.25		0.08			0.08	0.02

Intersection Summary			
Area Type:	Other		
Cycle Length: 75			
Actuated Cycle Length: 75			
Offset: 0 (0%), Referenced to phase 2:EBT, Start of Green			
Natural Cycle: 75			
Control Type: Actuated-Coordinated			
Maximum v/c Ratio: 0.79			
Intersection Signal Delay: 18.6		Intersection LOS: B	
Intersection Capacity Utilization 63.1%		ICU Level of Service B	
Analysis Period (min) 15			

Splits and Phases: 1: RR 220 & Hwy 15:06

Lane Group	NBL	NBT	NBR	SBL	SBT	SBR	NEL	NET	NER	SWL	SWT	SWR
Lane Configurations												
Volume (vph)	5	312	95	10	17	90	733	464	5	62	365	63
Ideal Flow (vphpl)	1900	1900	1900	1900	1900	1900	1900	1900	1900	1900	1900	1900
Lane Width (m)	3.7	3.7	3.7	3.7	3.7	3.7	3.5	3.7	3.7	3.7	3.7	3.7
Storage Length (m)	0.0		0.0	0.0		60.0	0.0		240.0	220.0		250.0
Storage Lanes	0		0	0		1	2		1	1		1
Taper Length (m)	30.0			30.0			30.0			30.0		
Lane Util. Factor	1.00	1.00	1.00	1.00	1.00	0.88	0.97	0.95	1.00	1.00	0.95	1.00
Frt		0.969				0.850			0.850			0.850
Flt Protected					0.982		0.950			0.950		
Satd. Flow (prot)	0	1692	0	0	1715	2613	3148	3318	1484	1659	3318	1484
Flt Permitted		0.999			0.847		0.950			0.950		
Satd. Flow (perm)	0	1691	0	0	1479	2613	3148	3318	1484	1659	3318	1484
Right Turn on Red			Yes			Yes			Yes			Yes
Satd. Flow (RTOR)		18				255			109			182
Link Speed (k/h)		80			80			100			100	
Link Distance (m)		351.2			170.9			250.3			253.4	
Travel Time (s)		15.8			7.7			9.0			9.1	
Peak Hour Factor	0.85	0.85	0.85	0.85	0.85	0.85	0.85	0.85	0.85	0.85	0.85	0.85
Growth Factor	50%	100%	100%	100%	100%	100%	100%	100%	100%	100%	100%	100%
Adj. Flow (vph)	3	367	112	12	20	106	862	546	6	73	429	74
Shared Lane Traffic (%)												
Lane Group Flow (vph)	0	482	0	0	32	106	862	546	6	73	429	74
Turn Type	Perm	NA		Perm	NA	Free	Prot	NA	Perm	Prot	NA	Perm
Protected Phases		2			6		7	4		3	8	
Permitted Phases	2			6		Free			4			8
Detector Phase	2	2		6	6		7	4	4	3	8	8
Switch Phase												
Minimum Initial (s)	10.0	10.0		10.0	10.0		10.0	15.0	15.0	10.0	15.0	15.0
Minimum Split (s)	16.0	16.0		16.0	16.0		21.0	21.0	21.0	16.0	21.0	21.0
Total Split (s)	34.0	34.0		34.0	34.0		35.0	40.0	40.0	16.0	21.0	21.0
Total Split (%)	37.8%	37.8%		37.8%	37.8%		38.9%	44.4%	44.4%	17.8%	23.3%	23.3%
Maximum Green (s)	28.0	28.0		28.0	28.0		29.0	34.0	34.0	10.0	15.0	15.0
Yellow Time (s)	5.0	5.0		5.0	5.0		5.0	5.0	5.0	5.0	5.0	5.0
All-Red Time (s)	1.0	1.0		1.0	1.0		1.0	1.0	1.0	1.0	1.0	1.0
Lost Time Adjust (s)		-1.0			-1.0		0.0	0.0	0.0	-1.0	0.0	0.0
Total Lost Time (s)		5.0			5.0		6.0	6.0	6.0	5.0	6.0	6.0
Lead/Lag							Lead	Lag	Lag	Lead	Lag	Lag
Lead-Lag Optimize?							Yes	Yes	Yes	Yes		
Vehicle Extension (s)	3.0	3.0		3.0	3.0		3.0	3.0	3.0	3.0	3.0	3.0
Recall Mode	None	None		Max	Max		Max	C-Max	C-Max	None	None	None
Act Effct Green (s)		29.0			29.0	90.0	29.0	37.2	37.2	11.0	15.0	15.0
Actuated g/C Ratio		0.32			0.32	1.00	0.32	0.41	0.41	0.12	0.17	0.17
v/c Ratio		0.87			0.07	0.04	0.85	0.40	0.01	0.36	0.78	0.19
Control Delay		45.4			21.7	0.0	38.1	20.7	0.0	41.9	46.8	1.0
Queue Delay		0.0			0.0	0.0	0.0	0.0	0.0	0.0	0.0	0.0
Total Delay		45.4			21.7	0.0	38.1	20.7	0.0	41.9	46.8	1.0
LOS		D			C	A	D	C	A	D	D	A
Approach Delay		45.4			5.1			31.3			40.3	

Lane Group	NBL	NBT	NBR	SBL	SBT	SBR	NEL	NET	NER	SWL	SWT	SWR
Approach LOS		D			A			C			D	
Queue Length 50th (m)		75.1			3.8	0.0	71.1	36.3	0.0	11.8	37.7	0.0
Queue Length 95th (m)		#116.3			9.4	0.0	86.7	46.7	0.0	23.2	50.2	0.0
Internal Link Dist (m)		327.2			146.9			226.3			229.4	
Turn Bay Length (m)						60.0			240.0	220.0		250.0
Base Capacity (vph)		557			476	2613	1014	1371	677	202	553	399
Starvation Cap Reductn		0			0	0	0	0	0	0	0	0
Spillback Cap Reductn		0			0	0	0	0	0	0	0	0
Storage Cap Reductn		0			0	0	0	0	0	0	0	0
Reduced v/c Ratio		0.87			0.07	0.04	0.85	0.40	0.01	0.36	0.78	0.19

Intersection Summary			
Area Type:	Other		
Cycle Length: 90			
Actuated Cycle Length: 90			
Offset: 0 (0%), Referenced to phase 4:NET, Start of Green			
Natural Cycle: 80			
Control Type: Actuated-Coordinated			
Maximum v/c Ratio: 0.87			
Intersection Signal Delay: 34.5		Intersection LOS: C	
Intersection Capacity Utilization 71.8%		ICU Level of Service C	
Analysis Period (min) 15			

95th percentile volume exceeds capacity, queue may be longer.
Queue shown is maximum after two cycles.

Splits and Phases: 2: Hwy 15:06 & Hwy 830/RR 214

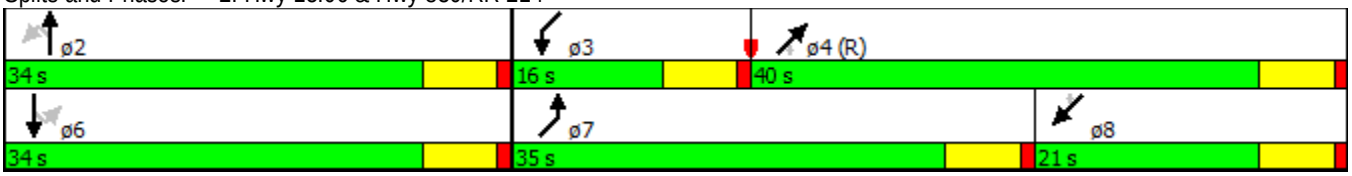

Lane Group	EBL	EBT	EBR	WBL	WBT	WBR	NBL	NBT	NBR	SBL	SBT	SBR
Lane Configurations												
Volume (vph)	70	665	5	5	1317	12	5	5	5	97	11	596
Ideal Flow (vphpl)	1900	1900	1900	1900	1900	1900	1900	1900	1900	1900	1900	1900
Lane Width (m)	3.5	3.7	3.5	3.5	3.7	3.5	4.0	4.0	4.0	3.5	3.5	3.7
Storage Length (m)	0.0		87.5	200.0		0.0	0.0		0.0	0.0		60.0
Storage Lanes	2		1	1		1	0		0	0		1
Taper Length (m)	50.0			30.0			30.0			30.0		
Lane Util. Factor	0.97	0.95	1.00	1.00	0.95	1.00	1.00	1.00	1.00	1.00	1.00	0.88
Frt			0.850			0.850		0.955				0.850
Flt Protected	0.950			0.950				0.984			0.957	
Satd. Flow (prot)	3148	3318	1452	1623	3318	1452	0	1695	0	0	1635	2613
Flt Permitted	0.950			0.950				0.891			0.735	
Satd. Flow (perm)	3148	3318	1452	1623	3318	1452	0	1535	0	0	1255	2613
Right Turn on Red			Yes			No			Yes			Yes
Satd. Flow (RTOR)			109					6				701
Link Speed (k/h)		100			100			80			80	
Link Distance (m)		239.4			250.6			200.1			259.6	
Travel Time (s)		8.6			9.0			9.0			11.7	
Peak Hour Factor	0.85	0.85	0.85	0.85	0.85	0.85	0.85	0.85	0.85	0.85	0.85	0.85
Adj. Flow (vph)	82	782	6	6	1549	14	6	6	6	114	13	701
Shared Lane Traffic (%)												
Lane Group Flow (vph)	82	782	6	6	1549	14	0	18	0	0	127	701
Turn Type	Prot	NA	Perm	Prot	NA	custom	Perm	NA		Perm	NA	Free
Protected Phases	5	2		1				8			4	
Permitted Phases			2		6	6	8			4		Free
Detector Phase	5	2	2	1	6	6	8	8		4	4	
Switch Phase												
Minimum Initial (s)	10.0	15.0	15.0	10.0	15.0	15.0	10.0	10.0		10.0	10.0	
Minimum Split (s)	21.0	21.0	21.0	16.0	21.0	21.0	21.0	21.0		16.0	16.0	
Total Split (s)	21.0	48.0	48.0	21.0	48.0	48.0	21.0	21.0		21.0	21.0	
Total Split (%)	23.3%	53.3%	53.3%	23.3%	53.3%	53.3%	23.3%	23.3%		23.3%	23.3%	
Maximum Green (s)	15.0	42.0	42.0	15.0	42.0	42.0	15.0	15.0		15.0	15.0	
Yellow Time (s)	5.0	5.0	5.0	5.0	5.0	5.0	5.0	5.0		5.0	5.0	
All-Red Time (s)	1.0	1.0	1.0	1.0	1.0	1.0	1.0	1.0		1.0	1.0	
Lost Time Adjust (s)	0.0	0.0	0.0	0.0	0.0	0.0		0.0			0.0	
Total Lost Time (s)	6.0	6.0	6.0	6.0	6.0	6.0		6.0			6.0	
Lead/Lag	Lead	Lag	Lag	Lead	Lag	Lag						
Lead-Lag Optimize?	Yes	Yes	Yes	Yes	Yes	Yes						
Vehicle Extension (s)	3.0	3.0	3.0	3.0	3.0	3.0	3.0	3.0		3.0	3.0	
Recall Mode	None	C-Max	C-Max	None	Max	Max	Min	Min		Min	Min	
Act Effct Green (s)	10.0	61.5	61.5	10.0	51.9	51.9		13.3			13.3	90.0
Actuated g/C Ratio	0.11	0.68	0.68	0.11	0.58	0.58		0.15			0.15	1.00
v/c Ratio	0.23	0.34	0.01	0.03	0.81	0.02		0.08			0.69	0.27
Control Delay	38.4	7.6	0.0	43.8	22.4	7.8		26.1			55.8	0.3
Queue Delay	0.0	0.0	0.0	0.0	0.0	0.0		0.0			0.0	0.0
Total Delay	38.4	7.6	0.0	43.8	22.4	7.8		26.1			55.8	0.3
LOS	D	A	A	D	C	A		C			E	A
Approach Delay		10.5			22.3			26.1			8.8	
Approach LOS		B			C			C			A	

Lane Group	EBL	EBT	EBR	WBL	WBT	WBR	NBL	NBT	NBR	SBL	SBT	SBR
Queue Length 50th (m)	6.8	23.2	0.0	0.8	140.5	1.0		1.8			20.8	0.0
Queue Length 95th (m)	12.6	51.7	0.0	m2.2	155.9	m2.4		7.1			36.1	0.0
Internal Link Dist (m)		215.4			226.6			176.1			235.6	
Turn Bay Length (m)			87.5	200.0								60.0
Base Capacity (vph)	524	2268	1027	270	1914	838		260			209	2613
Starvation Cap Reductn	0	0	0	0	0	0		0			0	0
Spillback Cap Reductn	0	0	0	0	0	0		0			0	0
Storage Cap Reductn	0	0	0	0	0	0		0			0	0
Reduced v/c Ratio	0.16	0.34	0.01	0.02	0.81	0.02		0.07			0.61	0.27

Intersection Summary			
Area Type:	Other		
Cycle Length: 90			
Actuated Cycle Length: 90			
Offset: 0 (0%), Referenced to phase 2:EBT, Start of Green			
Natural Cycle: 90			
Control Type: Actuated-Coordinated			
Maximum v/c Ratio: 0.81			
Intersection Signal Delay: 15.8		Intersection LOS: B	
Intersection Capacity Utilization 59.0%		ICU Level of Service B	
Analysis Period (min) 15			
m Volume for 95th percentile queue is metered by upstream signal.			

Splits and Phases: 1: RR 220 & Hwy 15:06

Lane Group	NBL	NBT	NBR	SBL	SBT	SBR	NEL	NET	NER	SWL	SWT	SWR
Lane Configurations												
Volume (vph)	5	29	86	70	342	613	123	536	8	174	614	5
Ideal Flow (vphpl)	1900	1900	1900	1900	1900	1900	1900	1900	1900	1900	1900	1900
Lane Width (m)	3.7	3.7	3.7	3.7	3.7	3.7	3.5	3.7	3.7	3.7	3.7	3.7
Storage Length (m)	0.0		0.0	0.0		60.0	0.0		240.0	220.0		250.0
Storage Lanes	0		0	0		1	2		1	1		1
Taper Length (m)	30.0			30.0			30.0			30.0		
Lane Util. Factor	1.00	1.00	1.00	1.00	1.00	0.88	0.97	0.95	1.00	1.00	0.95	1.00
Frt		0.901				0.850			0.850			0.850
Flt Protected		0.999			0.992		0.950			0.950		
Satd. Flow (prot)	0	1572	0	0	1732	2613	3148	3318	1484	1659	3318	1484
Flt Permitted		0.991			0.918		0.950			0.950		
Satd. Flow (perm)	0	1559	0	0	1603	2613	3148	3318	1484	1659	3318	1484
Right Turn on Red			Yes			Yes			Yes			Yes
Satd. Flow (RTOR)		101				655			109			109
Link Speed (k/h)		80			80			100			100	
Link Distance (m)		351.2			170.9			250.3			253.4	
Travel Time (s)		15.8			7.7			9.0			9.1	
Peak Hour Factor	0.85	0.85	0.85	0.85	0.85	0.85	0.85	0.85	0.85	0.85	0.85	0.85
Growth Factor	50%	100%	100%	100%	100%	100%	100%	100%	100%	100%	100%	100%
Adj. Flow (vph)	3	34	101	82	402	721	145	631	9	205	722	6
Shared Lane Traffic (%)												
Lane Group Flow (vph)	0	138	0	0	484	721	145	631	9	205	722	6
Turn Type	Perm	NA		Perm	NA	Free	Prot	NA	Perm	Prot	NA	Perm
Protected Phases		2			6		7	4		3	8	
Permitted Phases	2			6		Free			4			8
Detector Phase	2	2		6	6		7	4	4	3	8	8
Switch Phase												
Minimum Initial (s)	10.0	10.0		10.0	10.0		10.0	15.0	15.0	10.0	15.0	15.0
Minimum Split (s)	16.0	16.0		16.0	16.0		21.0	21.0	21.0	16.0	21.0	21.0
Total Split (s)	39.0	39.0		39.0	39.0		21.0	30.0	30.0	21.0	30.0	30.0
Total Split (%)	43.3%	43.3%		43.3%	43.3%		23.3%	33.3%	33.3%	23.3%	33.3%	33.3%
Maximum Green (s)	33.0	33.0		33.0	33.0		15.0	24.0	24.0	15.0	24.0	24.0
Yellow Time (s)	5.0	5.0		5.0	5.0		5.0	5.0	5.0	5.0	5.0	5.0
All-Red Time (s)	1.0	1.0		1.0	1.0		1.0	1.0	1.0	1.0	1.0	1.0
Lost Time Adjust (s)		-1.0			-1.0		0.0	0.0	0.0	-1.0	0.0	0.0
Total Lost Time (s)		5.0			5.0		6.0	6.0	6.0	5.0	6.0	6.0
Lead/Lag							Lead	Lag	Lag	Lead	Lag	Lag
Lead-Lag Optimize?							Yes	Yes	Yes	Yes		
Vehicle Extension (s)	3.0	3.0		3.0	3.0		3.0	3.0	3.0	3.0	3.0	3.0
Recall Mode	None	None		Max	Max		Max	C-Max	C-Max	None	None	None
Act Effct Green (s)		34.0			34.0	90.0	15.0	25.1	25.1	14.9	24.0	24.0
Actuated g/C Ratio		0.38			0.38	1.00	0.17	0.28	0.28	0.17	0.27	0.27
v/c Ratio		0.21			0.80	0.28	0.28	0.68	0.02	0.75	0.82	0.01
Control Delay		7.4			36.9	0.3	29.1	31.6	0.1	53.3	39.8	0.0
Queue Delay		0.0			0.0	0.0	0.0	0.0	0.0	0.0	0.0	0.0
Total Delay		7.4			36.9	0.3	29.1	31.6	0.1	53.3	39.8	0.0
LOS		A			D	A	C	C	A	D	D	A
Approach Delay		7.4			15.0			30.8			42.6	

Lane Group	NBL	NBT	NBR	SBL	SBT	SBR	NEL	NET	NER	SWL	SWT	SWR
Approach LOS		A			B			C			D	
Queue Length 50th (m)		4.0			73.2	0.0	11.8	53.8	0.0	33.6	61.4	0.0
Queue Length 95th (m)		13.8			#103.1	0.0	10.2	67.3	m0.0	#54.2	76.5	0.0
Internal Link Dist (m)		327.2			146.9			226.3			229.4	
Turn Bay Length (m)						60.0			240.0	220.0		250.0
Base Capacity (vph)		651			605	2613	524	924	492	294	884	475
Starvation Cap Reductn		0			0	0	0	0	0	0	0	0
Spillback Cap Reductn		0			0	0	0	0	0	0	0	0
Storage Cap Reductn		0			0	0	0	0	0	0	0	0
Reduced v/c Ratio		0.21			0.80	0.28	0.28	0.68	0.02	0.70	0.82	0.01

Intersection Summary

Area Type: Other
Cycle Length: 90
Actuated Cycle Length: 90
Offset: 0 (0%), Referenced to phase 4:NET, Start of Green
Natural Cycle: 80
Control Type: Actuated-Coordinated
Maximum v/c Ratio: 0.82
Intersection Signal Delay: 27.1 Intersection LOS: C
Intersection Capacity Utilization 68.0% ICU Level of Service C
Analysis Period (min) 15
95th percentile volume exceeds capacity, queue may be longer.
Queue shown is maximum after two cycles.
m Volume for 95th percentile queue is metered by upstream signal.

Splits and Phases: 2: Hwy 15:06 & Hwy 830/RR 214

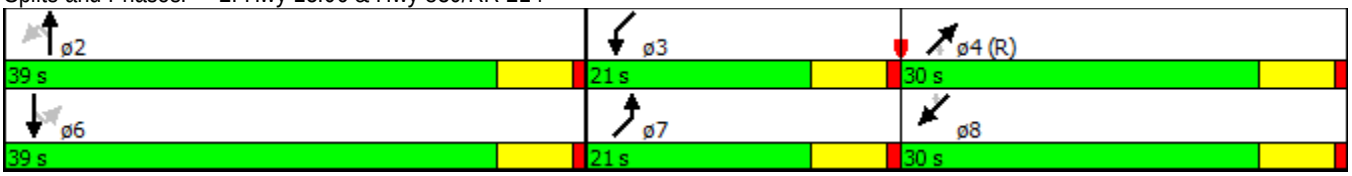

APPENDIX K

Sensitivity Analysis

Lane Group	EBL	EBT	EBR	WBL	WBT	WBR	NBL	NBT	NBR	SBL	SBT	SBR
Lane Configurations												
Volume (vph)	1120	1045	5	5	383	206	5	16	5	25	5	103
Ideal Flow (vphpl)	1900	1900	1900	1900	1900	1900	1900	1900	1900	1900	1900	1900
Lane Width (m)	3.5	3.7	3.5	3.5	3.7	3.5	4.0	4.0	4.0	3.5	3.5	3.7
Storage Length (m)	0.0		87.5	200.0		0.0	0.0		0.0	0.0		60.0
Storage Lanes	2		1	1		1	0		0	0		1
Taper Length (m)	50.0			30.0			30.0			30.0		
Lane Util. Factor	0.97	0.95	1.00	1.00	0.95	1.00	1.00	1.00	1.00	1.00	1.00	0.88
Frt			0.850			0.850		0.974				0.850
Flt Protected	0.950			0.950				0.990			0.960	
Satd. Flow (prot)	3148	3318	1452	1623	3318	1452	0	1740	0	0	1640	2613
Flt Permitted	0.950			0.950				0.937			0.741	
Satd. Flow (perm)	3148	3318	1452	1623	3318	1452	0	1646	0	0	1266	2613
Right Turn on Red			Yes			No			Yes			Yes
Satd. Flow (RTOR)			109					6				255
Link Speed (k/h)		100			100			80			80	
Link Distance (m)		239.4			250.6			200.1			259.6	
Travel Time (s)		8.6			9.0			9.0			11.7	
Peak Hour Factor	0.85	0.85	0.85	0.85	0.85	0.85	0.85	0.85	0.85	0.85	0.85	0.85
Adj. Flow (vph)	1318	1229	6	6	451	242	6	19	6	29	6	121
Shared Lane Traffic (%)												
Lane Group Flow (vph)	1318	1229	6	6	451	242	0	31	0	0	35	121
Turn Type	Prot	NA	Perm	Prot	NA	custom	Perm	NA		Perm	NA	Free
Protected Phases	5	2		1				8			4	
Permitted Phases			2		6	6	8			4		Free
Detector Phase	5	2	2	1	6	6	8	8		4	4	
Switch Phase												
Minimum Initial (s)	15.0	15.0	15.0	10.0	15.0	15.0	10.0	10.0		10.0	10.0	
Minimum Split (s)	21.0	21.0	21.0	16.0	21.0	21.0	21.0	21.0		16.0	16.0	
Total Split (s)	45.0	53.0	53.0	16.0	24.0	24.0	21.0	21.0		21.0	21.0	
Total Split (%)	50.0%	58.9%	58.9%	17.8%	26.7%	26.7%	23.3%	23.3%		23.3%	23.3%	
Yellow Time (s)	5.0	5.0	5.0	5.0	5.0	5.0	5.0	5.0		5.0	5.0	
All-Red Time (s)	1.0	1.0	1.0	1.0	1.0	1.0	1.0	1.0		1.0	1.0	
Lost Time Adjust (s)	0.0	0.0	0.0	0.0	0.0	0.0		0.0			0.0	
Total Lost Time (s)	6.0	6.0	6.0	6.0	6.0	6.0		6.0			6.0	
Lead/Lag	Lead	Lag	Lag	Lead	Lag	Lag						
Lead-Lag Optimize?	Yes	Yes	Yes	Yes	Yes	Yes						
Recall Mode	None	C-Max	C-Max	None	Max	Max	Min	Min		Min	Min	
Act Effct Green (s)	42.6	64.6	64.6	10.0	19.2	19.2		10.2			10.2	90.0
Actuated g/C Ratio	0.47	0.72	0.72	0.11	0.21	0.21		0.11			0.11	1.00
v/c Ratio	0.88	0.52	0.01	0.03	0.64	0.78		0.16			0.24	0.05
Control Delay	30.0	7.8	0.0	36.4	37.5	53.7		32.9			41.0	0.0
Queue Delay	0.0	0.0	0.0	0.0	0.0	0.0		0.0			0.0	0.0
Total Delay	30.0	7.8	0.0	36.4	37.5	53.7		32.9			41.0	0.0
LOS	C	A	A	D	D	D		C			D	A
Approach Delay		19.2			43.1			32.9			9.2	
Approach LOS		B			D			C			A	

Intersection Summary

Area Type:	Other		
Cycle Length: 90			
Actuated Cycle Length: 90			
Offset: 0 (0%), Referenced to phase 2:EBT, Start of Green			
Natural Cycle: 90			
Control Type: Actuated-Coordinated			
Maximum v/c Ratio: 0.88			
Intersection Signal Delay: 23.7		Intersection LOS: C	
Intersection Capacity Utilization 68.0%		ICU Level of Service C	
Analysis Period (min) 15			

Splits and Phases: 1: RR 220 & Hwy 15:06

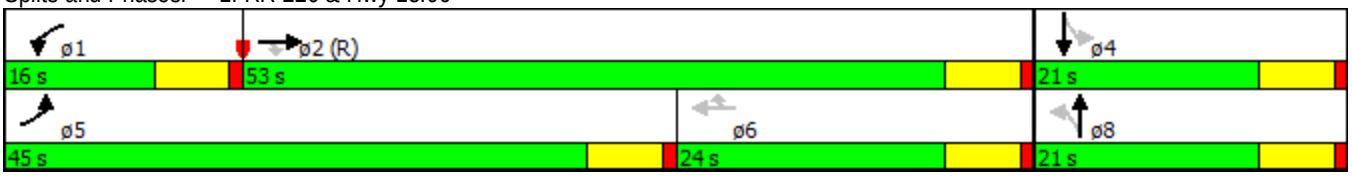

Lane Group	NBL	NBT	NBR	SBL	SBT	SBR	NEL	NET	NER	SWL	SWT	SWR
Lane Configurations												
Volume (vph)	5	332	76	10	19	96	790	372	5	49	292	67
Ideal Flow (vphpl)	1900	1900	1900	1900	1900	1900	1900	1900	1900	1900	1900	1900
Lane Width (m)	3.7	3.7	3.7	3.7	3.7	3.7	3.5	3.7	3.7	3.7	3.7	3.7
Storage Length (m)	0.0		0.0	0.0		60.0	0.0		240.0	220.0		250.0
Storage Lanes	0		0	0		1	2		1	1		1
Taper Length (m)	30.0			30.0			30.0			30.0		
Lane Util. Factor	1.00	1.00	1.00	1.00	1.00	0.88	0.97	0.95	1.00	1.00	0.95	1.00
Frt		0.975				0.850			0.850			0.850
Flt Protected					0.983		0.950			0.950		
Satd. Flow (prot)	0	1703	0	0	1717	2613	3148	3318	1484	1659	3318	1484
Flt Permitted		0.999			0.848		0.950			0.950		
Satd. Flow (perm)	0	1701	0	0	1481	2613	3148	3318	1484	1659	3318	1484
Right Turn on Red			Yes			Yes			Yes			Yes
Satd. Flow (RTOR)		12				229			98			164
Link Speed (k/h)		80			80			100			100	
Link Distance (m)		351.2			170.9			250.3			253.4	
Travel Time (s)		15.8			7.7			9.0			9.1	
Peak Hour Factor	0.85	0.85	0.85	0.85	0.85	0.85	0.85	0.85	0.85	0.85	0.85	0.85
Growth Factor	50%	100%	100%	100%	100%	100%	100%	100%	100%	100%	100%	100%
Adj. Flow (vph)	3	391	89	12	22	113	929	438	6	58	344	79
Shared Lane Traffic (%)												
Lane Group Flow (vph)	0	483	0	0	34	113	929	438	6	58	344	79
Turn Type	Perm	NA		Perm	NA	Free	Prot	NA	Perm	Prot	NA	Perm
Protected Phases		2			6		7	4		3	8	
Permitted Phases	2			6		Free			4			8
Detector Phase	2	2		6	6		7	4	4	3	8	8
Switch Phase												
Minimum Initial (s)	10.0	10.0		10.0	10.0		15.0	15.0	15.0	10.0	15.0	15.0
Minimum Split (s)	16.0	16.0		16.0	16.0		21.0	21.0	21.0	16.0	21.0	21.0
Total Split (s)	37.0	37.0		37.0	37.0		40.0	47.0	47.0	16.0	23.0	23.0
Total Split (%)	37.0%	37.0%		37.0%	37.0%		40.0%	47.0%	47.0%	16.0%	23.0%	23.0%
Yellow Time (s)	5.0	5.0		5.0	5.0		5.0	5.0	5.0	5.0	5.0	5.0
All-Red Time (s)	1.0	1.0		1.0	1.0		1.0	1.0	1.0	1.0	1.0	1.0
Lost Time Adjust (s)		-1.0			-1.0		0.0	0.0	0.0	-1.0	0.0	0.0
Total Lost Time (s)		5.0			5.0		6.0	6.0	6.0	5.0	6.0	6.0
Lead/Lag							Lead	Lag	Lag	Lead	Lag	Lag
Lead-Lag Optimize?							Yes	Yes	Yes	Yes		
Recall Mode	None	None		Max	Max		Max	C-Max	C-Max	None	None	None
Act Effct Green (s)		32.0			32.0	100.0	34.0	44.2	44.2	11.0	17.0	17.0
Actuated g/C Ratio		0.32			0.32	1.00	0.34	0.44	0.44	0.11	0.17	0.17
v/c Ratio		0.88			0.07	0.04	0.87	0.30	0.01	0.32	0.61	0.20
Control Delay		49.9			24.3	0.0	41.1	19.7	0.0	46.3	43.7	1.2
Queue Delay		0.0			0.0	0.0	0.0	0.0	0.0	0.0	0.0	0.0
Total Delay		49.9			24.3	0.0	41.1	19.7	0.0	46.3	43.7	1.2
LOS		D			C	A	D	B	A	D	D	A
Approach Delay		49.9			5.7			34.1			37.0	
Approach LOS		D			A			C			D	

Intersection Summary

Area Type:	Other		
Cycle Length: 100			
Actuated Cycle Length: 100			
Offset: 0 (0%), Referenced to phase 4:NET, Start of Green			
Natural Cycle: 90			
Control Type: Actuated-Coordinated			
Maximum v/c Ratio: 0.88			
Intersection Signal Delay: 36.1		Intersection LOS: D	
Intersection Capacity Utilization 73.3%		ICU Level of Service D	
Analysis Period (min) 15			

Splits and Phases: 2: Hwy 15:06 & Hwy 830/RR 214

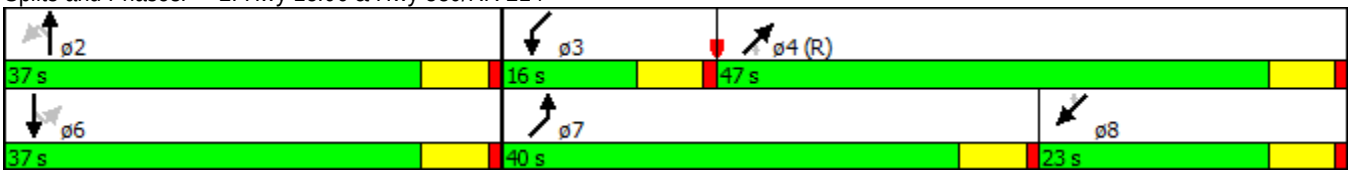

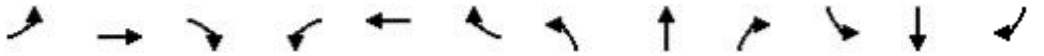

Lane Group	EBL	EBT	EBR	WBL	WBT	WBR	NBL	NBT	NBR	SBL	SBT	SBR
Lane Configurations												
Volume (vph)	1194	1045	5	5	383	224	5	17	5	27	5	112
Ideal Flow (vphpl)	1900	1900	1900	1900	1900	1900	1900	1900	1900	1900	1900	1900
Lane Width (m)	3.5	3.7	3.5	3.5	3.7	3.5	4.0	4.0	4.0	3.5	3.5	3.7
Storage Length (m)	0.0		87.5	200.0		0.0	0.0		0.0	0.0		60.0
Storage Lanes	2		1	1		1	0		0	0		1
Taper Length (m)	50.0			30.0			30.0			30.0		
Lane Util. Factor	0.97	0.95	1.00	1.00	0.95	1.00	1.00	1.00	1.00	1.00	1.00	0.88
Frt			0.850			0.850		0.975				0.850
Flt Protected	0.950			0.950				0.991			0.960	
Satd. Flow (prot)	3148	3318	1452	1623	3318	1452	0	1743	0	0	1640	2613
Flt Permitted	0.950			0.950				0.939			0.737	
Satd. Flow (perm)	3148	3318	1452	1623	3318	1452	0	1652	0	0	1259	2613
Right Turn on Red			Yes			No			Yes			Yes
Satd. Flow (RTOR)			109					6				255
Link Speed (k/h)		100			100			80			80	
Link Distance (m)		239.4			250.6			200.1			259.6	
Travel Time (s)		8.6			9.0			9.0			11.7	
Peak Hour Factor	0.85	0.85	0.85	0.85	0.85	0.85	0.85	0.85	0.85	0.85	0.85	0.85
Adj. Flow (vph)	1405	1229	6	6	451	264	6	20	6	32	6	132
Shared Lane Traffic (%)												
Lane Group Flow (vph)	1405	1229	6	6	451	264	0	32	0	0	38	132
Turn Type	Prot	NA	Perm	Prot	NA	custom	Perm	NA		Perm	NA	Free
Protected Phases	5	2		1				8			4	
Permitted Phases			2		6	6	8			4		Free
Detector Phase	5	2	2	1	6	6	8	8		4	4	
Switch Phase												
Minimum Initial (s)	15.0	15.0	15.0	7.0	15.0	15.0	10.0	10.0		10.0	10.0	
Minimum Split (s)	21.0	21.0	21.0	13.0	21.0	21.0	21.0	21.0		16.0	16.0	
Total Split (s)	44.0	56.0	56.0	13.0	25.0	25.0	21.0	21.0		21.0	21.0	
Total Split (%)	48.9%	62.2%	62.2%	14.4%	27.8%	27.8%	23.3%	23.3%		23.3%	23.3%	
Yellow Time (s)	5.0	5.0	5.0	5.0	5.0	5.0	5.0	5.0		5.0	5.0	
All-Red Time (s)	1.0	1.0	1.0	1.0	1.0	1.0	1.0	1.0		1.0	1.0	
Lost Time Adjust (s)	0.0	0.0	0.0	0.0	0.0	0.0		0.0			0.0	
Total Lost Time (s)	6.0	6.0	6.0	6.0	6.0	6.0		6.0			6.0	
Lead/Lag	Lead	Lag	Lag	Lead	Lag	Lag						
Lead-Lag Optimize?	Yes	Yes	Yes	Yes	Yes	Yes						
Recall Mode	None	C-Max	C-Max	None	Max	Max	Min	Min		Min	Min	
Act Effct Green (s)	42.7	65.1	65.1	7.0	19.0	19.0		10.3			10.3	90.0
Actuated g/C Ratio	0.47	0.72	0.72	0.08	0.21	0.21		0.11			0.11	1.00
v/c Ratio	0.94	0.51	0.01	0.05	0.64	0.86		0.17			0.27	0.05
Control Delay	36.4	7.3	0.0	39.4	37.3	62.2		33.0			41.4	0.0
Queue Delay	0.0	0.0	0.0	0.0	0.0	0.0		0.0			0.0	0.0
Total Delay	36.4	7.3	0.0	39.4	37.3	62.2		33.0			41.4	0.0
LOS	D	A	A	D	D	E		C			D	A
Approach Delay		22.8			46.5			33.0			9.3	
Approach LOS		C			D			C			A	

Intersection Summary

Area Type:	Other	
Cycle Length: 90		
Actuated Cycle Length: 90		
Offset: 0 (0%), Referenced to phase 2:EBT, Start of Green		
Natural Cycle: 90		
Control Type: Actuated-Coordinated		
Maximum v/c Ratio: 0.94		
Intersection Signal Delay: 27.0	Intersection LOS: C	
Intersection Capacity Utilization 71.3%	ICU Level of Service C	
Analysis Period (min) 15		

Splits and Phases: 1: RR 220 & Hwy 15:06

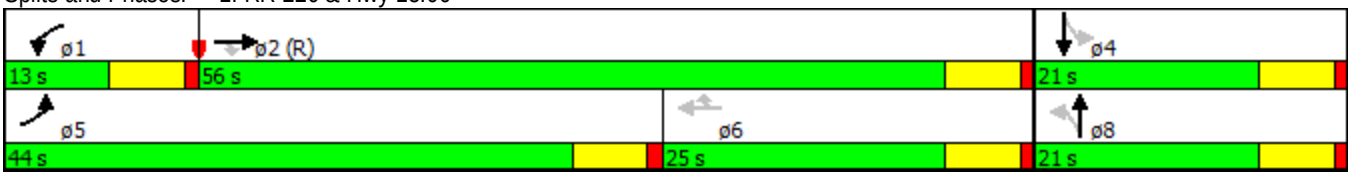

Lane Group	NBL	NBT	NBR	SBL	SBT	SBR	NEL	NET	NER	SWL	SWT	SWR
Lane Configurations												
Volume (vph)	5	336	76	10	20	97	799	372	5	49	292	68
Ideal Flow (vphpl)	1900	1900	1900	1900	1900	1900	1900	1900	1900	1900	1900	1900
Lane Width (m)	3.7	3.7	3.7	3.7	3.7	3.7	3.5	3.7	3.7	3.7	3.7	3.7
Storage Length (m)	0.0		0.0	0.0		60.0	0.0		240.0	220.0		250.0
Storage Lanes	0		0	0		1	2		1	1		1
Taper Length (m)	30.0			30.0			30.0			30.0		
Lane Util. Factor	1.00	1.00	1.00	1.00	1.00	0.88	0.97	0.95	1.00	1.00	0.95	1.00
Frt		0.975				0.850			0.850			0.850
Flt Protected					0.984		0.950			0.950		
Satd. Flow (prot)	0	1703	0	0	1719	2613	3148	3318	1484	1659	3318	1484
Flt Permitted		0.999			0.852		0.950			0.950		
Satd. Flow (perm)	0	1701	0	0	1488	2613	3148	3318	1484	1659	3318	1484
Right Turn on Red			Yes			Yes			Yes			Yes
Satd. Flow (RTOR)		12				229			98			164
Link Speed (k/h)		80			80			100			100	
Link Distance (m)		351.2			170.9			250.3			253.4	
Travel Time (s)		15.8			7.7			9.0			9.1	
Peak Hour Factor	0.85	0.85	0.85	0.85	0.85	0.85	0.85	0.85	0.85	0.85	0.85	0.85
Growth Factor	50%	100%	100%	100%	100%	100%	100%	100%	100%	100%	100%	100%
Adj. Flow (vph)	3	395	89	12	24	114	940	438	6	58	344	80
Shared Lane Traffic (%)												
Lane Group Flow (vph)	0	487	0	0	36	114	940	438	6	58	344	80
Turn Type	Perm	NA		Perm	NA	Free	Prot	NA	Perm	Prot	NA	Perm
Protected Phases		2			6		7	4		3	8	
Permitted Phases	2			6		Free			4			8
Detector Phase	2	2		6	6		7	4	4	3	8	8
Switch Phase												
Minimum Initial (s)	10.0	10.0		10.0	10.0		15.0	15.0	15.0	10.0	15.0	15.0
Minimum Split (s)	16.0	16.0		16.0	16.0		21.0	21.0	21.0	16.0	21.0	21.0
Total Split (s)	37.0	37.0		37.0	37.0		40.0	47.0	47.0	16.0	23.0	23.0
Total Split (%)	37.0%	37.0%		37.0%	37.0%		40.0%	47.0%	47.0%	16.0%	23.0%	23.0%
Yellow Time (s)	5.0	5.0		5.0	5.0		5.0	5.0	5.0	5.0	5.0	5.0
All-Red Time (s)	1.0	1.0		1.0	1.0		1.0	1.0	1.0	1.0	1.0	1.0
Lost Time Adjust (s)		-1.0			-1.0		0.0	0.0	0.0	-1.0	0.0	0.0
Total Lost Time (s)		5.0			5.0		6.0	6.0	6.0	5.0	6.0	6.0
Lead/Lag							Lead	Lag	Lag	Lead	Lag	Lag
Lead-Lag Optimize?							Yes	Yes	Yes	Yes		
Recall Mode	None	None		Max	Max		Max	C-Max	C-Max	None	None	None
Act Effct Green (s)		32.0			32.0	100.0	34.0	44.2	44.2	11.0	17.0	17.0
Actuated g/C Ratio		0.32			0.32	1.00	0.34	0.44	0.44	0.11	0.17	0.17
v/c Ratio		0.88			0.08	0.04	0.88	0.30	0.01	0.32	0.61	0.21
Control Delay		50.8			24.4	0.0	42.0	19.7	0.0	46.3	43.7	1.2
Queue Delay		0.0			0.0	0.0	0.0	0.0	0.0	0.0	0.0	0.0
Total Delay		50.8			24.4	0.0	42.0	19.7	0.0	46.3	43.7	1.2
LOS		D			C	A	D	B	A	D	D	A
Approach Delay		50.8			5.9			34.7			36.9	
Approach LOS		D			A			C			D	

Intersection Summary

Area Type:	Other	
Cycle Length: 100		
Actuated Cycle Length: 100		
Offset: 0 (0%), Referenced to phase 4:NET, Start of Green		
Natural Cycle: 80		
Control Type: Actuated-Coordinated		
Maximum v/c Ratio: 0.88		
Intersection Signal Delay: 36.6		Intersection LOS: D
Intersection Capacity Utilization 73.8%		ICU Level of Service D
Analysis Period (min) 15		

Splits and Phases: 2: Hwy 15:06 & Hwy 830/RR 214

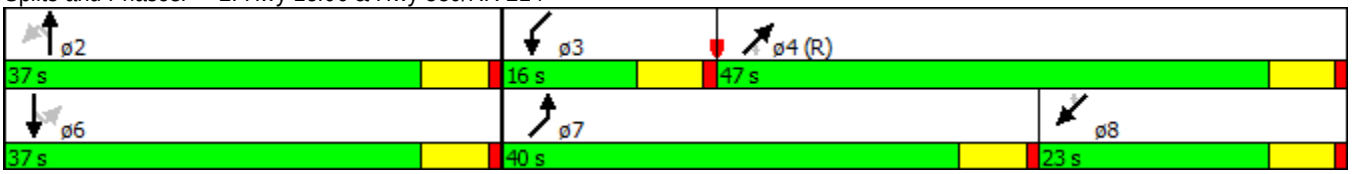

Lane Group	EBL	EBT	EBR	WBL	WBT	WBR	NBL	NBT	NBR	SBL	SBT	SBR
Lane Configurations												
Volume (vph)	1194	1045	5	5	383	224	5	17	5	27	5	112
Ideal Flow (vphpl)	1900	1900	1900	1900	1900	1900	1900	1900	1900	1900	1900	1900
Lane Width (m)	3.5	3.7	3.5	3.5	3.7	3.5	4.0	4.0	4.0	3.5	3.5	3.7
Storage Length (m)	0.0		87.5	200.0		0.0	0.0		0.0	0.0		60.0
Storage Lanes	2		1	1		1	0		0	0		1
Taper Length (m)	50.0			30.0			30.0			30.0		
Lane Util. Factor	0.97	0.95	1.00	1.00	0.95	1.00	1.00	1.00	1.00	1.00	1.00	0.88
Frt			0.850			0.850		0.975				0.850
Flt Protected	0.950			0.950				0.991			0.960	
Satd. Flow (prot)	3148	3318	1452	1623	3318	1452	0	1743	0	0	1640	2613
Flt Permitted	0.950			0.950				0.938			0.737	
Satd. Flow (perm)	3148	3318	1452	1623	3318	1452	0	1650	0	0	1259	2613
Right Turn on Red			Yes			No			Yes			Yes
Satd. Flow (RTOR)			98					6				229
Link Speed (k/h)		100			100			80			80	
Link Distance (m)		239.4			250.6			200.1			259.6	
Travel Time (s)		8.6			9.0			9.0			11.7	
Peak Hour Factor	0.85	0.85	0.85	0.85	0.85	0.85	0.85	0.85	0.85	0.85	0.85	0.85
Adj. Flow (vph)	1405	1229	6	6	451	264	6	20	6	32	6	132
Shared Lane Traffic (%)												
Lane Group Flow (vph)	1405	1229	6	6	451	264	0	32	0	0	38	132
Turn Type	Prot	NA	Perm	Prot	NA	custom	Perm	NA		Perm	NA	Free
Protected Phases	5	2		1				8			4	
Permitted Phases			2		6	6	8			4		Free
Detector Phase	5	2	2	1	6	6	8	8		4	4	
Switch Phase												
Minimum Initial (s)	15.0	15.0	15.0	10.0	15.0	15.0	10.0	10.0		10.0	10.0	
Minimum Split (s)	21.0	21.0	21.0	16.0	21.0	21.0	21.0	21.0		16.0	16.0	
Total Split (s)	45.0	59.0	59.0	16.0	30.0	30.0	25.0	25.0		25.0	25.0	
Total Split (%)	45.0%	59.0%	59.0%	16.0%	30.0%	30.0%	25.0%	25.0%		25.0%	25.0%	
Yellow Time (s)	5.0	5.0	5.0	5.0	5.0	5.0	5.0	5.0		5.0	5.0	
All-Red Time (s)	1.0	1.0	1.0	1.0	1.0	1.0	1.0	1.0		1.0	1.0	
Lost Time Adjust (s)	0.0	0.0	0.0	0.0	0.0	0.0		0.0			0.0	
Total Lost Time (s)	6.0	6.0	6.0	6.0	6.0	6.0		6.0			6.0	
Lead/Lag	Lead	Lag	Lag	Lead	Lag	Lag						
Lead-Lag Optimize?	Yes	Yes	Yes	Yes	Yes	Yes						
Recall Mode	None	C-Max	C-Max	None	Max	Max	Min	Min		Min	Min	
Act Effct Green (s)	47.7	74.5	74.5	10.0	24.0	24.0		10.3			10.3	100.0
Actuated g/C Ratio	0.48	0.74	0.74	0.10	0.24	0.24		0.10			0.10	1.00
v/c Ratio	0.94	0.50	0.01	0.04	0.57	0.76		0.18			0.29	0.05
Control Delay	38.0	7.1	0.0	60.8	37.0	51.1		37.6			47.6	0.0
Queue Delay	0.0	0.0	0.0	0.0	0.0	0.0		0.0			0.0	0.0
Total Delay	38.0	7.1	0.0	60.8	37.0	51.1		37.6			47.6	0.0
LOS	D	A	A	E	D	D		D			D	A
Approach Delay		23.5			42.4			37.6			10.7	
Approach LOS		C			D			D			B	

Intersection Summary

Area Type:	Other		
Cycle Length: 100			
Actuated Cycle Length: 100			
Offset: 0 (0%), Referenced to phase 2:EBT, Start of Green			
Natural Cycle: 90			
Control Type: Actuated-Coordinated			
Maximum v/c Ratio: 0.94			
Intersection Signal Delay: 26.9		Intersection LOS: C	
Intersection Capacity Utilization 71.3%		ICU Level of Service C	
Analysis Period (min) 15			

Splits and Phases: 1: RR 220 & Hwy 15:06

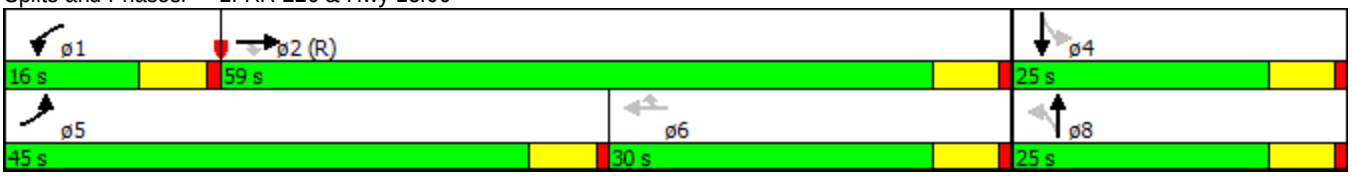

Lane Group	NBL	NBT	NBR	SBL	SBT	SBR	NEL	NET	NER	SWL	SWT	SWR
Lane Configurations												
Volume (vph)	5	336	76	10	20	97	799	372	5	49	292	68
Ideal Flow (vphpl)	1900	1900	1900	1900	1900	1900	1900	1900	1900	1900	1900	1900
Lane Width (m)	3.7	3.7	3.7	3.7	3.7	3.7	3.5	3.7	3.7	3.7	3.7	3.7
Storage Length (m)	0.0		0.0	0.0		60.0	0.0		240.0	220.0		250.0
Storage Lanes	0		0	0		1	2		1	1		1
Taper Length (m)	30.0			30.0			30.0			30.0		
Lane Util. Factor	1.00	1.00	1.00	1.00	1.00	0.88	0.97	0.95	1.00	1.00	0.95	1.00
Frt		0.975				0.850			0.850			0.850
Flt Protected					0.984		0.950			0.950		
Satd. Flow (prot)	0	1703	0	0	1719	2613	3148	3318	1484	1659	3318	1484
Flt Permitted		0.999			0.852		0.950			0.950		
Satd. Flow (perm)	0	1701	0	0	1488	2613	3148	3318	1484	1659	3318	1484
Right Turn on Red			Yes			Yes			Yes			Yes
Satd. Flow (RTOR)		12				229			98			164
Link Speed (k/h)		80			80			100			100	
Link Distance (m)		351.2			170.9			250.3			253.4	
Travel Time (s)		15.8			7.7			9.0			9.1	
Peak Hour Factor	0.85	0.85	0.85	0.85	0.85	0.85	0.85	0.85	0.85	0.85	0.85	0.85
Growth Factor	50%	100%	100%	100%	100%	100%	100%	100%	100%	100%	100%	100%
Adj. Flow (vph)	3	395	89	12	24	114	940	438	6	58	344	80
Shared Lane Traffic (%)												
Lane Group Flow (vph)	0	487	0	0	36	114	940	438	6	58	344	80
Turn Type	Perm	NA		Perm	NA	Free	Prot	NA	Perm	Prot	NA	Perm
Protected Phases		2			6		7	4		3	8	
Permitted Phases	2			6		Free			4			8
Detector Phase	2	2		6	6		7	4	4	3	8	8
Switch Phase												
Minimum Initial (s)	10.0	10.0		10.0	10.0		15.0	15.0	15.0	10.0	15.0	15.0
Minimum Split (s)	16.0	16.0		16.0	16.0		21.0	21.0	21.0	16.0	21.0	21.0
Total Split (s)	37.0	37.0		37.0	37.0		40.0	47.0	47.0	16.0	23.0	23.0
Total Split (%)	37.0%	37.0%		37.0%	37.0%		40.0%	47.0%	47.0%	16.0%	23.0%	23.0%
Yellow Time (s)	5.0	5.0		5.0	5.0		5.0	5.0	5.0	5.0	5.0	5.0
All-Red Time (s)	1.0	1.0		1.0	1.0		1.0	1.0	1.0	1.0	1.0	1.0
Lost Time Adjust (s)		-1.0			-1.0		0.0	0.0	0.0	-1.0	0.0	0.0
Total Lost Time (s)		5.0			5.0		6.0	6.0	6.0	5.0	6.0	6.0
Lead/Lag							Lead	Lag	Lag	Lead	Lag	Lag
Lead-Lag Optimize?							Yes	Yes	Yes	Yes		
Recall Mode	None	None		Max	Max		Max	C-Max	C-Max	None	None	None
Act Effct Green (s)		32.0			32.0	100.0	34.0	44.2	44.2	11.0	17.0	17.0
Actuated g/C Ratio		0.32			0.32	1.00	0.34	0.44	0.44	0.11	0.17	0.17
v/c Ratio		0.88			0.08	0.04	0.88	0.30	0.01	0.32	0.61	0.21
Control Delay		50.8			24.4	0.0	36.5	24.1	0.0	46.3	43.7	1.2
Queue Delay		0.0			0.0	0.0	0.0	0.0	0.0	0.0	0.0	0.0
Total Delay		50.8			24.4	0.0	36.5	24.1	0.0	46.3	43.7	1.2
LOS		D			C	A	D	C	A	D	D	A
Approach Delay		50.8			5.9			32.4			36.9	
Approach LOS		D			A			C			D	

Intersection Summary

Area Type:	Other	
Cycle Length: 100		
Actuated Cycle Length: 100		
Offset: 0 (0%), Referenced to phase 4:NET, Start of Green		
Natural Cycle: 80		
Control Type: Actuated-Coordinated		
Maximum v/c Ratio: 0.88		
Intersection Signal Delay: 35.3		Intersection LOS: D
Intersection Capacity Utilization 73.8%		ICU Level of Service D
Analysis Period (min) 15		

Splits and Phases: 2: Hwy 15:06 & Hwy 830/RR 214

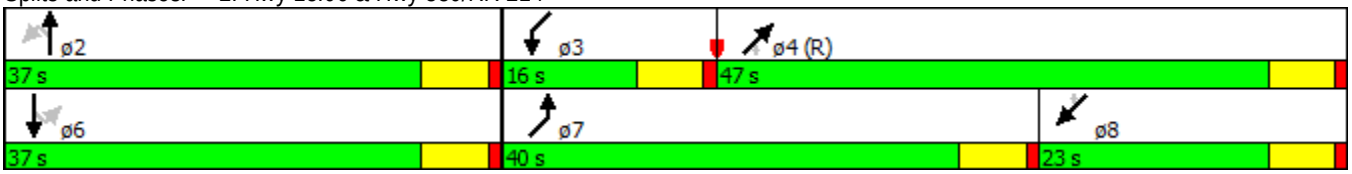

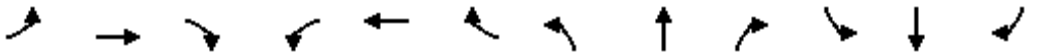

Lane Group	EBL	EBT	EBR	WBL	WBT	WBR	NBL	NBT	NBR	SBL	SBT	SBR
Lane Configurations												
Volume (vph)	1487	1045	5	5	383	293	5	21	5	34	5	144
Ideal Flow (vphpl)	1900	1900	1900	1900	1900	1900	1900	1900	1900	1900	1900	1900
Lane Width (m)	3.5	3.7	3.5	3.5	3.7	3.5	4.0	4.0	4.0	3.5	3.5	3.7
Storage Length (m)	0.0		87.5	200.0		0.0	0.0		0.0	0.0		60.0
Storage Lanes	2		1	1		1	0		0	0		1
Taper Length (m)	50.0			30.0			30.0			30.0		
Lane Util. Factor	0.97	0.95	1.00	1.00	0.95	1.00	1.00	1.00	1.00	1.00	1.00	0.88
Frt			0.850			0.850		0.978				0.850
Flt Protected	0.950			0.950				0.992			0.958	
Satd. Flow (prot)	3148	3318	1452	1623	3318	1452	0	1750	0	0	1636	2613
Flt Permitted	0.950			0.950				0.943			0.727	
Satd. Flow (perm)	3148	3318	1452	1623	3318	1452	0	1664	0	0	1242	2613
Right Turn on Red			Yes			No			Yes			Yes
Satd. Flow (RTOR)			98					6				229
Link Speed (k/h)		100			100			80			80	
Link Distance (m)		239.4			250.6			200.1			259.6	
Travel Time (s)		8.6			9.0			9.0			11.7	
Peak Hour Factor	0.85	0.85	0.85	0.85	0.85	0.85	0.85	0.85	0.85	0.85	0.85	0.85
Adj. Flow (vph)	1749	1229	6	6	451	345	6	25	6	40	6	169
Shared Lane Traffic (%)												
Lane Group Flow (vph)	1749	1229	6	6	451	345	0	37	0	0	46	169
Turn Type	Prot	NA	Perm	Prot	NA	custom	Perm	NA		Perm	NA	Free
Protected Phases	5	2		1				8			4	
Permitted Phases			2		6	6	8			4		Free
Detector Phase	5	2	2	1	6	6	8	8		4	4	
Switch Phase												
Minimum Initial (s)	15.0	15.0	15.0	10.0	15.0	15.0	10.0	10.0		10.0	10.0	
Minimum Split (s)	21.0	21.0	21.0	16.0	21.0	21.0	16.0	16.0		16.0	16.0	
Total Split (s)	56.0	68.0	68.0	16.0	28.0	28.0	16.0	16.0		16.0	16.0	
Total Split (%)	56.0%	68.0%	68.0%	16.0%	28.0%	28.0%	16.0%	16.0%		16.0%	16.0%	
Yellow Time (s)	5.0	5.0	5.0	5.0	5.0	5.0	5.0	5.0		5.0	5.0	
All-Red Time (s)	1.0	1.0	1.0	1.0	1.0	1.0	1.0	1.0		1.0	1.0	
Lost Time Adjust (s)	0.0	0.0	0.0	0.0	0.0	0.0		0.0			0.0	
Total Lost Time (s)	6.0	6.0	6.0	6.0	6.0	6.0		6.0			6.0	
Lead/Lag	Lead	Lag	Lag	Lead	Lag	Lag						
Lead-Lag Optimize?	Yes	Yes	Yes	Yes	Yes	Yes						
Recall Mode	None	C-Max	C-Max	None	Max	Max	Min	Min		Min	Min	
Act Effct Green (s)	50.0	74.8	74.8	10.0	22.0	22.0		10.0			10.0	100.0
Actuated g/C Ratio	0.50	0.75	0.75	0.10	0.22	0.22		0.10			0.10	1.00
v/c Ratio	1.11	0.50	0.01	0.04	0.62	1.08		0.22			0.37	0.06
Control Delay	85.5	6.8	0.0	41.4	39.5	112.5		39.6			51.3	0.0
Queue Delay	0.0	0.0	0.0	0.0	0.0	0.0		0.0			0.0	0.0
Total Delay	85.5	6.8	0.0	41.4	39.5	112.5		39.6			51.3	0.0
LOS	F	A	A	D	D	F		D			D	A
Approach Delay		52.9			70.9			39.6			11.0	
Approach LOS		D			E			D			B	

Intersection Summary

Area Type:	Other		
Cycle Length: 100			
Actuated Cycle Length: 100			
Offset: 0 (0%), Referenced to phase 2:EBT, Start of Green			
Natural Cycle: 130			
Control Type: Actuated-Coordinated			
Maximum v/c Ratio: 1.11			
Intersection Signal Delay: 54.1		Intersection LOS: D	
Intersection Capacity Utilization 83.9%		ICU Level of Service E	
Analysis Period (min) 15			

Splits and Phases: 1: RR 220 & Hwy 15:06

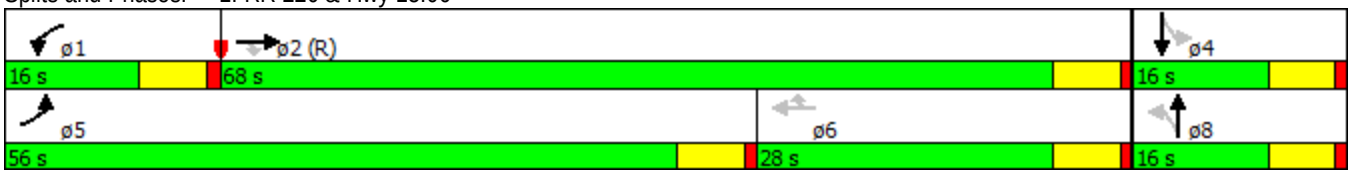

Lane Group	NBL	NBT	NBR	SBL	SBT	SBR	NEL	NET	NER	SWL	SWT	SWR
Lane Configurations												
Volume (vph)	5	350	76	11	21	101	838	372	5	49	292	71
Ideal Flow (vphpl)	1900	1900	1900	1900	1900	1900	1900	1900	1900	1900	1900	1900
Lane Width (m)	3.7	3.7	3.7	3.7	3.7	3.7	3.5	3.7	3.7	3.7	3.7	3.7
Storage Length (m)	0.0		0.0	0.0		60.0	0.0		240.0	220.0		250.0
Storage Lanes	0		0	0		1	2		1	1		1
Taper Length (m)	30.0			30.0			30.0			30.0		
Lane Util. Factor	1.00	1.00	1.00	1.00	1.00	0.88	0.97	0.95	1.00	1.00	0.95	1.00
Frt		0.976				0.850			0.850			0.850
Flt Protected					0.983		0.950			0.950		
Satd. Flow (prot)	0	1705	0	0	1717	2613	3148	3318	1484	1659	3318	1484
Flt Permitted		0.999			0.780		0.950			0.950		
Satd. Flow (perm)	0	1703	0	0	1362	2613	3148	3318	1484	1659	3318	1484
Right Turn on Red			Yes			Yes			Yes			Yes
Satd. Flow (RTOR)		14				286			123			205
Link Speed (k/h)		80			80			100			100	
Link Distance (m)		351.2			170.9			250.3			253.4	
Travel Time (s)		15.8			7.7			9.0			9.1	
Peak Hour Factor	0.85	0.85	0.85	0.85	0.85	0.85	0.85	0.85	0.85	0.85	0.85	0.85
Growth Factor	50%	100%	100%	100%	100%	100%	100%	100%	100%	100%	100%	100%
Adj. Flow (vph)	3	412	89	13	25	119	986	438	6	58	344	84
Shared Lane Traffic (%)												
Lane Group Flow (vph)	0	504	0	0	38	119	986	438	6	58	344	84
Turn Type	Perm	NA		Perm	NA	Free	Prot	NA	Perm	Prot	NA	Perm
Protected Phases		2			6		7	4		3	8	
Permitted Phases	2			6		Free			4			8
Detector Phase	2	2		6	6		7	4	4	3	8	8
Switch Phase												
Minimum Initial (s)	10.0	10.0		10.0	10.0		15.0	15.0	15.0	10.0	15.0	15.0
Minimum Split (s)	16.0	16.0		16.0	16.0		21.0	21.0	21.0	16.0	21.0	21.0
Total Split (s)	28.0	28.0		28.0	28.0		31.0	36.0	36.0	16.0	21.0	21.0
Total Split (%)	35.0%	35.0%		35.0%	35.0%		38.8%	45.0%	45.0%	20.0%	26.3%	26.3%
Yellow Time (s)	5.0	5.0		5.0	5.0		5.0	5.0	5.0	5.0	5.0	5.0
All-Red Time (s)	1.0	1.0		1.0	1.0		1.0	1.0	1.0	1.0	1.0	1.0
Lost Time Adjust (s)		-1.0			-1.0		0.0	0.0	0.0	-1.0	0.0	0.0
Total Lost Time (s)		5.0			5.0		6.0	6.0	6.0	5.0	6.0	6.0
Lead/Lag							Lead	Lag	Lag	Lead	Lag	Lag
Lead-Lag Optimize?							Yes	Yes	Yes	Yes		
Recall Mode	None	None		Max	Max		Max	C-Max	C-Max	None	None	None
Act Effct Green (s)		23.0			23.0	80.0	25.0	36.4	36.4	11.0	15.0	15.0
Actuated g/C Ratio		0.29			0.29	1.00	0.31	0.46	0.46	0.14	0.19	0.19
v/c Ratio		1.01			0.10	0.05	1.00	0.29	0.01	0.25	0.55	0.19
Control Delay		73.0			21.8	0.0	58.7	16.1	0.0	34.1	33.3	0.9
Queue Delay		0.0			0.0	0.0	0.0	0.0	0.0	0.0	0.0	0.0
Total Delay		73.0			21.8	0.0	58.7	16.1	0.0	34.1	33.3	0.9
LOS		E			C	A	E	B	A	C	C	A
Approach Delay		73.0			5.3			45.4			27.8	
Approach LOS		E			A			D			C	

Intersection Summary

Area Type:	Other		
Cycle Length: 80			
Actuated Cycle Length: 80			
Offset: 0 (0%), Referenced to phase 4:NET, Start of Green			
Natural Cycle: 90			
Control Type: Actuated-Coordinated			
Maximum v/c Ratio: 1.01			
Intersection Signal Delay: 45.1		Intersection LOS: D	
Intersection Capacity Utilization 75.6%		ICU Level of Service D	
Analysis Period (min) 15			

Splits and Phases: 2: Hwy 15:06 & Hwy 830/RR 214

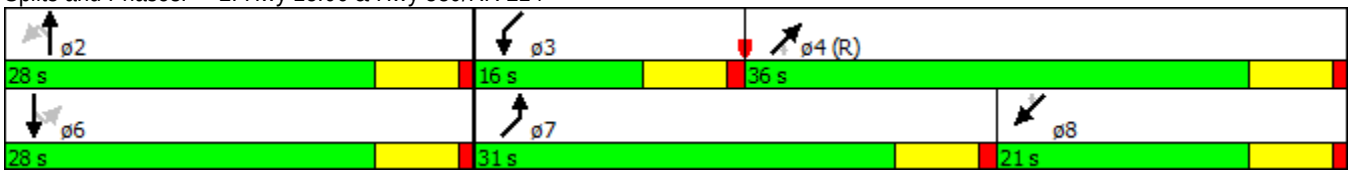

Lane Group	EBL	EBT	EBR	WBL	WBT	WBR	NBL	NBT	NBR	SBL	SBT	SBR
Lane Configurations												
Volume (vph)	1561	1045	5	5	383	311	5	22	5	36	5	153
Ideal Flow (vphpl)	1900	1900	1900	1900	1900	1900	1900	1900	1900	1900	1900	1900
Lane Width (m)	3.5	3.7	3.5	3.5	3.7	3.5	4.0	4.0	4.0	3.5	3.5	3.7
Storage Length (m)	0.0		87.5	200.0		0.0	0.0		0.0	0.0		60.0
Storage Lanes	2		1	1		1	0		0	0		1
Taper Length (m)	50.0			30.0			30.0			30.0		
Lane Util. Factor	0.97	0.95	1.00	1.00	0.95	1.00	1.00	1.00	1.00	1.00	1.00	0.88
Frt			0.850			0.850		0.979				0.850
Flt Protected	0.950			0.950				0.992			0.958	
Satd. Flow (prot)	3148	3318	1452	1623	3318	1452	0	1752	0	0	1636	2613
Flt Permitted	0.950			0.950				0.945			0.726	
Satd. Flow (perm)	3148	3318	1452	1623	3318	1452	0	1669	0	0	1240	2613
Right Turn on Red			Yes			No			Yes			Yes
Satd. Flow (RTOR)			109					6				255
Link Speed (k/h)		100			100			80			80	
Link Distance (m)		239.4			250.6			200.1			259.6	
Travel Time (s)		8.6			9.0			9.0			11.7	
Peak Hour Factor	0.85	0.85	0.85	0.85	0.85	0.85	0.85	0.85	0.85	0.85	0.85	0.85
Adj. Flow (vph)	1836	1229	6	6	451	366	6	26	6	42	6	180
Shared Lane Traffic (%)												
Lane Group Flow (vph)	1836	1229	6	6	451	366	0	38	0	0	48	180
Turn Type	Prot	NA	Perm	Prot	NA	custom	Perm	NA		Perm	NA	Free
Protected Phases	5	2		1				8			4	
Permitted Phases			2		6	6	8			4		Free
Detector Phase	5	2	2	1	6	6	8	8		4	4	
Switch Phase												
Minimum Initial (s)	15.0	15.0	15.0	10.0	15.0	15.0	10.0	10.0		10.0	10.0	
Minimum Split (s)	21.0	21.0	21.0	16.0	21.0	21.0	16.0	16.0		16.0	16.0	
Total Split (s)	48.0	58.0	58.0	16.0	26.0	26.0	16.0	16.0		16.0	16.0	
Total Split (%)	53.3%	64.4%	64.4%	17.8%	28.9%	28.9%	17.8%	17.8%		17.8%	17.8%	
Yellow Time (s)	5.0	5.0	5.0	5.0	5.0	5.0	5.0	5.0		5.0	5.0	
All-Red Time (s)	1.0	1.0	1.0	1.0	1.0	1.0	1.0	1.0		1.0	1.0	
Lost Time Adjust (s)	0.0	0.0	0.0	0.0	0.0	0.0		0.0			0.0	
Total Lost Time (s)	6.0	6.0	6.0	6.0	6.0	6.0		6.0			6.0	
Lead/Lag	Lead	Lag	Lag	Lead	Lag	Lag						
Lead-Lag Optimize?	Yes	Yes	Yes	Yes	Yes	Yes						
Recall Mode	None	C-Max	C-Max	None	Max	Max	Min	Min		Min	Min	
Act Effct Green (s)	42.0	64.8	64.8	10.0	20.0	20.0		10.0			10.0	90.0
Actuated g/C Ratio	0.47	0.72	0.72	0.11	0.22	0.22		0.11			0.11	1.00
v/c Ratio	1.25	0.51	0.01	0.03	0.61	1.14		0.20			0.35	0.07
Control Delay	143.2	7.6	0.0	36.4	35.6	127.0		34.8			44.8	0.1
Queue Delay	0.0	0.0	0.0	0.0	0.0	0.0		0.0			0.0	0.0
Total Delay	143.2	7.6	0.0	36.4	35.6	127.0		34.8			44.8	0.1
LOS	F	A	A	D	D	F		C			D	A
Approach Delay		88.6			76.3			34.8			9.5	
Approach LOS		F			E			C			A	

Intersection Summary

Area Type:	Other		
Cycle Length: 90			
Actuated Cycle Length: 90			
Offset: 0 (0%), Referenced to phase 2:EBT, Start of Green			
Natural Cycle: 150			
Control Type: Actuated-Coordinated			
Maximum v/c Ratio: 1.25			
Intersection Signal Delay: 81.4		Intersection LOS: F	
Intersection Capacity Utilization 87.1%		ICU Level of Service E	
Analysis Period (min) 15			

Splits and Phases: 1: RR 220 & Hwy 15:06

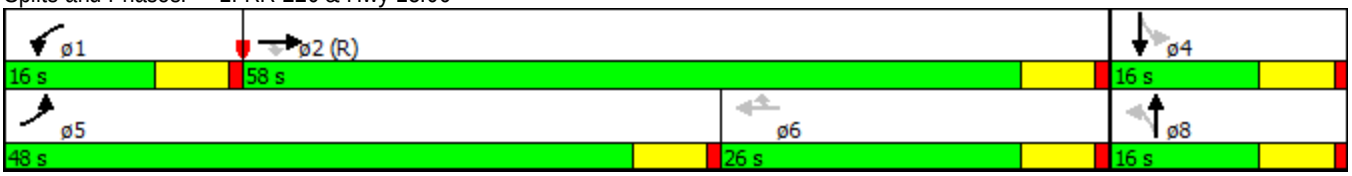

Lane Group	NBL	NBT	NBR	SBL	SBT	SBR	NEL	NET	NER	SWL	SWT	SWR
Lane Configurations												
Volume (vph)	5	353	76	11	21	102	848	372	5	49	292	71
Ideal Flow (vphpl)	1900	1900	1900	1900	1900	1900	1900	1900	1900	1900	1900	1900
Lane Width (m)	3.7	3.7	3.7	3.7	3.7	3.7	3.5	3.7	3.7	3.7	3.7	3.7
Storage Length (m)	0.0		0.0	0.0		60.0	0.0		240.0	220.0		250.0
Storage Lanes	0		0	0		1	2		1	1		1
Taper Length (m)	30.0			30.0			30.0			30.0		
Lane Util. Factor	1.00	1.00	1.00	1.00	1.00	0.88	0.97	0.95	1.00	1.00	0.95	1.00
Frt		0.976				0.850			0.850			0.850
Flt Protected					0.983		0.950			0.950		
Satd. Flow (prot)	0	1705	0	0	1717	2613	3148	3318	1484	1659	3318	1484
Flt Permitted		0.999			0.829		0.950			0.950		
Satd. Flow (perm)	0	1703	0	0	1448	2613	3148	3318	1484	1659	3318	1484
Right Turn on Red			Yes			Yes			Yes			Yes
Satd. Flow (RTOR)		11				229			98			164
Link Speed (k/h)		80			80			100			100	
Link Distance (m)		351.2			170.9			250.3			253.4	
Travel Time (s)		15.8			7.7			9.0			9.1	
Peak Hour Factor	0.85	0.85	0.85	0.85	0.85	0.85	0.85	0.85	0.85	0.85	0.85	0.85
Growth Factor	50%	100%	100%	100%	100%	100%	100%	100%	100%	100%	100%	100%
Adj. Flow (vph)	3	415	89	13	25	120	998	438	6	58	344	84
Shared Lane Traffic (%)												
Lane Group Flow (vph)	0	507	0	0	38	120	998	438	6	58	344	84
Turn Type	Perm	NA		Perm	NA	Free	Prot	NA	Perm	Prot	NA	Perm
Protected Phases		2			6		7	4		3	8	
Permitted Phases	2			6		Free			4			8
Detector Phase	2	2		6	6		7	4	4	3	8	8
Switch Phase												
Minimum Initial (s)	10.0	10.0		10.0	10.0		15.0	15.0	15.0	10.0	15.0	15.0
Minimum Split (s)	16.0	16.0		16.0	16.0		21.0	21.0	21.0	16.0	21.0	21.0
Total Split (s)	37.0	37.0		37.0	37.0		40.0	47.0	47.0	16.0	23.0	23.0
Total Split (%)	37.0%	37.0%		37.0%	37.0%		40.0%	47.0%	47.0%	16.0%	23.0%	23.0%
Yellow Time (s)	5.0	5.0		5.0	5.0		5.0	5.0	5.0	5.0	5.0	5.0
All-Red Time (s)	1.0	1.0		1.0	1.0		1.0	1.0	1.0	1.0	1.0	1.0
Lost Time Adjust (s)		-1.0			-1.0		0.0	0.0	0.0	-1.0	0.0	0.0
Total Lost Time (s)		5.0			5.0		6.0	6.0	6.0	5.0	6.0	6.0
Lead/Lag							Lead	Lag	Lag	Lead	Lag	Lag
Lead-Lag Optimize?							Yes	Yes	Yes	Yes		
Recall Mode	None	None		Max	Max		Max	C-Max	C-Max	None	None	None
Act Effct Green (s)		32.0			32.0	100.0	34.0	44.2	44.2	11.0	17.0	17.0
Actuated g/C Ratio		0.32			0.32	1.00	0.34	0.44	0.44	0.11	0.17	0.17
v/c Ratio		0.92			0.08	0.05	0.93	0.30	0.01	0.32	0.61	0.22
Control Delay		56.1			24.5	0.0	48.2	19.7	0.0	46.3	43.7	1.3
Queue Delay		0.0			0.0	0.0	0.0	0.0	0.0	0.0	0.0	0.0
Total Delay		56.1			24.5	0.0	48.2	19.7	0.0	46.3	43.7	1.3
LOS		E			C	A	D	B	A	D	D	A
Approach Delay		56.1			5.9			39.3			36.7	
Approach LOS		E			A			D			D	

Intersection Summary

Area Type:	Other	
Cycle Length: 100		
Actuated Cycle Length: 100		
Offset: 0 (0%), Referenced to phase 4:NET, Start of Green		
Natural Cycle: 90		
Control Type: Actuated-Coordinated		
Maximum v/c Ratio: 0.93		
Intersection Signal Delay: 40.0		Intersection LOS: D
Intersection Capacity Utilization 76.1%		ICU Level of Service D
Analysis Period (min) 15		

Splits and Phases: 2: Hwy 15:06 & Hwy 830/RR 214

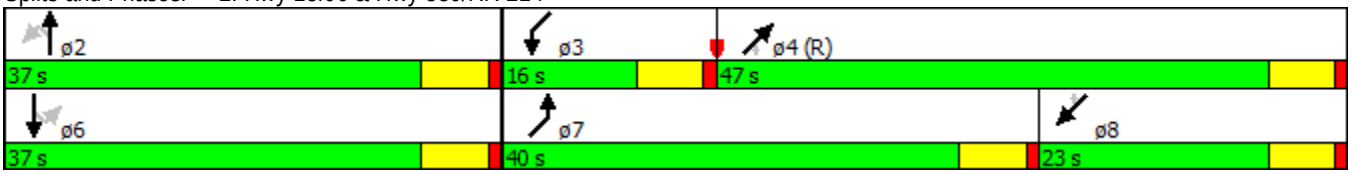

Lane Group	EBL	EBT	EBR	WBL	WBT	WBR	NBL	NBT	NBR	SBL	SBT	SBR
Lane Configurations												
Volume (vph)	858	1137	5	5	458	144	5	14	5	18	5	74
Ideal Flow (vphpl)	1900	1900	1900	1900	1900	1900	1900	1900	1900	1900	1900	1900
Lane Width (m)	3.5	3.7	3.5	3.5	3.7	3.5	4.0	4.0	4.0	3.5	3.5	3.7
Storage Length (m)	0.0		87.5	200.0		0.0	0.0		0.0	0.0		60.0
Storage Lanes	2		1	1		1	0		0	0		1
Taper Length (m)	50.0			30.0			30.0			30.0		
Lane Util. Factor	0.97	0.95	1.00	1.00	0.95	1.00	1.00	1.00	1.00	1.00	1.00	0.88
Frt			0.850			0.850		0.971				0.850
Flt Protected	0.950			0.950				0.989			0.963	
Satd. Flow (prot)	3148	3318	1452	1623	3318	1452	0	1732	0	0	1645	2613
Flt Permitted	0.950			0.950				0.934			0.755	
Satd. Flow (perm)	3148	3318	1452	1623	3318	1452	0	1636	0	0	1290	2613
Right Turn on Red			Yes			No			Yes			Yes
Satd. Flow (RTOR)			131					6				305
Link Speed (k/h)		100			100			80			80	
Link Distance (m)		239.4			250.6			200.1			259.6	
Travel Time (s)		8.6			9.0			9.0			11.7	
Peak Hour Factor	0.85	0.85	0.85	0.85	0.85	0.85	0.85	0.85	0.85	0.85	0.85	0.85
Adj. Flow (vph)	1009	1338	6	6	539	169	6	16	6	21	6	87
Shared Lane Traffic (%)												
Lane Group Flow (vph)	1009	1338	6	6	539	169	0	28	0	0	27	87
Turn Type	Prot	NA	Perm	Prot	NA	custom	Perm	NA		Perm	NA	Free
Protected Phases	5	2		1				8			4	
Permitted Phases			2		6	6	8			4		Free
Detector Phase	5	2	2	1	6	6	8	8		4	4	
Switch Phase												
Minimum Initial (s)	15.0	15.0	15.0	10.0	15.0	15.0	10.0	10.0		10.0	10.0	
Minimum Split (s)	21.0	21.0	21.0	16.0	21.0	21.0	21.0	21.0		16.0	16.0	
Total Split (s)	33.0	38.0	38.0	16.0	21.0	21.0	21.0	21.0		21.0	21.0	
Total Split (%)	44.0%	50.7%	50.7%	21.3%	28.0%	28.0%	28.0%	28.0%		28.0%	28.0%	
Yellow Time (s)	5.0	5.0	5.0	5.0	5.0	5.0	5.0	5.0		5.0	5.0	
All-Red Time (s)	1.0	1.0	1.0	1.0	1.0	1.0	1.0	1.0		1.0	1.0	
Lost Time Adjust (s)	0.0	0.0	0.0	0.0	0.0	0.0		0.0			0.0	
Total Lost Time (s)	6.0	6.0	6.0	6.0	6.0	6.0		6.0			6.0	
Lead/Lag	Lead	Lag	Lag	Lead	Lag	Lag						
Lead-Lag Optimize?	Yes	Yes	Yes	Yes	Yes	Yes						
Recall Mode	None	C-Max	C-Max	None	Max	Max	Min	Min		Min	Min	
Act Effct Green (s)	29.0	49.8	49.8	10.0	18.0	18.0		10.0			10.0	75.0
Actuated g/C Ratio	0.39	0.66	0.66	0.13	0.24	0.24		0.13			0.13	1.00
v/c Ratio	0.83	0.61	0.01	0.03	0.68	0.49		0.13			0.16	0.03
Control Delay	27.2	10.1	0.0	28.8	32.4	31.5		25.8			31.3	0.0
Queue Delay	0.0	0.0	0.0	0.0	0.0	0.0		0.0			0.0	0.0
Total Delay	27.2	10.1	0.0	28.8	32.4	31.5		25.8			31.3	0.0
LOS	C	B	A	C	C	C		C			C	A
Approach Delay		17.4			32.1			25.8			7.4	
Approach LOS		B			C			C			A	

Intersection Summary

Area Type:	Other		
Cycle Length: 75			
Actuated Cycle Length: 75			
Offset: 0 (0%), Referenced to phase 2:EBT, Start of Green			
Natural Cycle: 75			
Control Type: Actuated-Coordinated			
Maximum v/c Ratio: 0.83			
Intersection Signal Delay: 20.4		Intersection LOS: C	
Intersection Capacity Utilization 63.1%		ICU Level of Service B	
Analysis Period (min) 15			

Splits and Phases: 1: RR 220 & Hwy 15:06

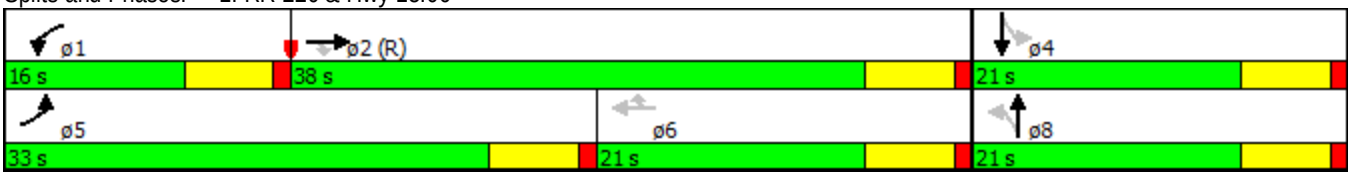

Lane Group	NBL	NBT	NBR	SBL	SBT	SBR	NEL	NET	NER	SWL	SWT	SWR
Lane Configurations												
Volume (vph)	5	322	95	11	18	94	761	464	5	62	365	65
Ideal Flow (vphpl)	1900	1900	1900	1900	1900	1900	1900	1900	1900	1900	1900	1900
Lane Width (m)	3.7	3.7	3.7	3.7	3.7	3.7	3.5	3.7	3.7	3.7	3.7	3.7
Storage Length (m)	0.0		0.0	0.0		60.0	0.0		240.0	220.0		250.0
Storage Lanes	0		0	0		1	2		1	1		1
Taper Length (m)	30.0			30.0			30.0			30.0		
Lane Util. Factor	1.00	1.00	1.00	1.00	1.00	0.88	0.97	0.95	1.00	1.00	0.95	1.00
Frt		0.969				0.850			0.850			0.850
Flt Protected					0.981		0.950			0.950		
Satd. Flow (prot)	0	1692	0	0	1713	2613	3148	3318	1484	1659	3318	1484
Flt Permitted		0.999			0.836		0.950			0.950		
Satd. Flow (perm)	0	1691	0	0	1460	2613	3148	3318	1484	1659	3318	1484
Right Turn on Red			Yes			Yes			Yes			Yes
Satd. Flow (RTOR)		16				229			98			164
Link Speed (k/h)		80			80			100			100	
Link Distance (m)		351.2			170.9			250.3			253.4	
Travel Time (s)		15.8			7.7			9.0			9.1	
Peak Hour Factor	0.85	0.85	0.85	0.85	0.85	0.85	0.85	0.85	0.85	0.85	0.85	0.85
Growth Factor	50%	100%	100%	100%	100%	100%	100%	100%	100%	100%	100%	100%
Adj. Flow (vph)	3	379	112	13	21	111	895	546	6	73	429	76
Shared Lane Traffic (%)												
Lane Group Flow (vph)	0	494	0	0	34	111	895	546	6	73	429	76
Turn Type	Perm	NA		Perm	NA	Free	Prot	NA	Perm	Prot	NA	Perm
Protected Phases		2			6		7	4		3	8	
Permitted Phases	2			6		Free			4			8
Detector Phase	2	2		6	6		7	4	4	3	8	8
Switch Phase												
Minimum Initial (s)	10.0	10.0		10.0	10.0		15.0	15.0	15.0	10.0	15.0	15.0
Minimum Split (s)	16.0	16.0		16.0	16.0		21.0	21.0	21.0	16.0	21.0	21.0
Total Split (s)	38.0	38.0		38.0	38.0		39.0	46.0	46.0	16.0	23.0	23.0
Total Split (%)	38.0%	38.0%		38.0%	38.0%		39.0%	46.0%	46.0%	16.0%	23.0%	23.0%
Yellow Time (s)	5.0	5.0		5.0	5.0		5.0	5.0	5.0	5.0	5.0	5.0
All-Red Time (s)	1.0	1.0		1.0	1.0		1.0	1.0	1.0	1.0	1.0	1.0
Lost Time Adjust (s)		-1.0			-1.0		0.0	0.0	0.0	-1.0	0.0	0.0
Total Lost Time (s)		5.0			5.0		6.0	6.0	6.0	5.0	6.0	6.0
Lead/Lag							Lead	Lag	Lag	Lead	Lag	Lag
Lead-Lag Optimize?							Yes	Yes	Yes	Yes		
Recall Mode	None	None		Max	Max		Max	C-Max	C-Max	None	None	None
Act Effct Green (s)		33.0			33.0	100.0	33.0	43.2	43.2	11.0	17.0	17.0
Actuated g/C Ratio		0.33			0.33	1.00	0.33	0.43	0.43	0.11	0.17	0.17
v/c Ratio		0.87			0.07	0.04	0.86	0.38	0.01	0.40	0.76	0.20
Control Delay		48.1			23.6	0.0	41.5	21.3	0.0	48.6	49.4	1.1
Queue Delay		0.0			0.0	0.0	0.0	0.0	0.0	0.0	0.0	0.0
Total Delay		48.1			23.6	0.0	41.5	21.3	0.0	48.6	49.4	1.1
LOS		D			C	A	D	C	A	D	D	A
Approach Delay		48.1			5.6			33.7			43.0	
Approach LOS		D			A			C			D	

Intersection Summary

Area Type:	Other	
Cycle Length: 100		
Actuated Cycle Length: 100		
Offset: 0 (0%), Referenced to phase 4:NET, Start of Green		
Natural Cycle: 90		
Control Type: Actuated-Coordinated		
Maximum v/c Ratio: 0.87		
Intersection Signal Delay: 36.8		Intersection LOS: D
Intersection Capacity Utilization 73.2%		ICU Level of Service D
Analysis Period (min) 15		

Splits and Phases: 2: Hwy 15:06 & Hwy 830/RR 214

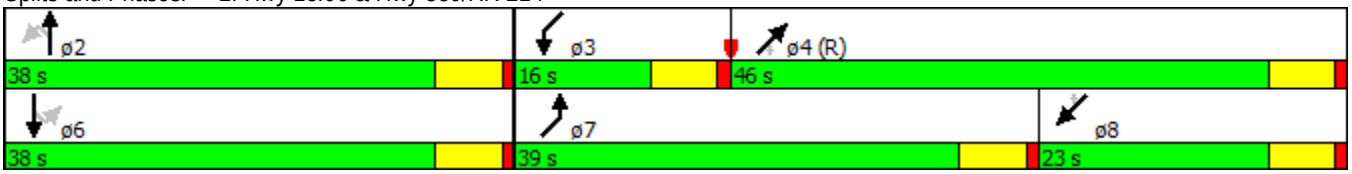

APPENDIX L

Sasol's Site Plan (prelim) and Type IIa and IVa Intersection Treatment Plan

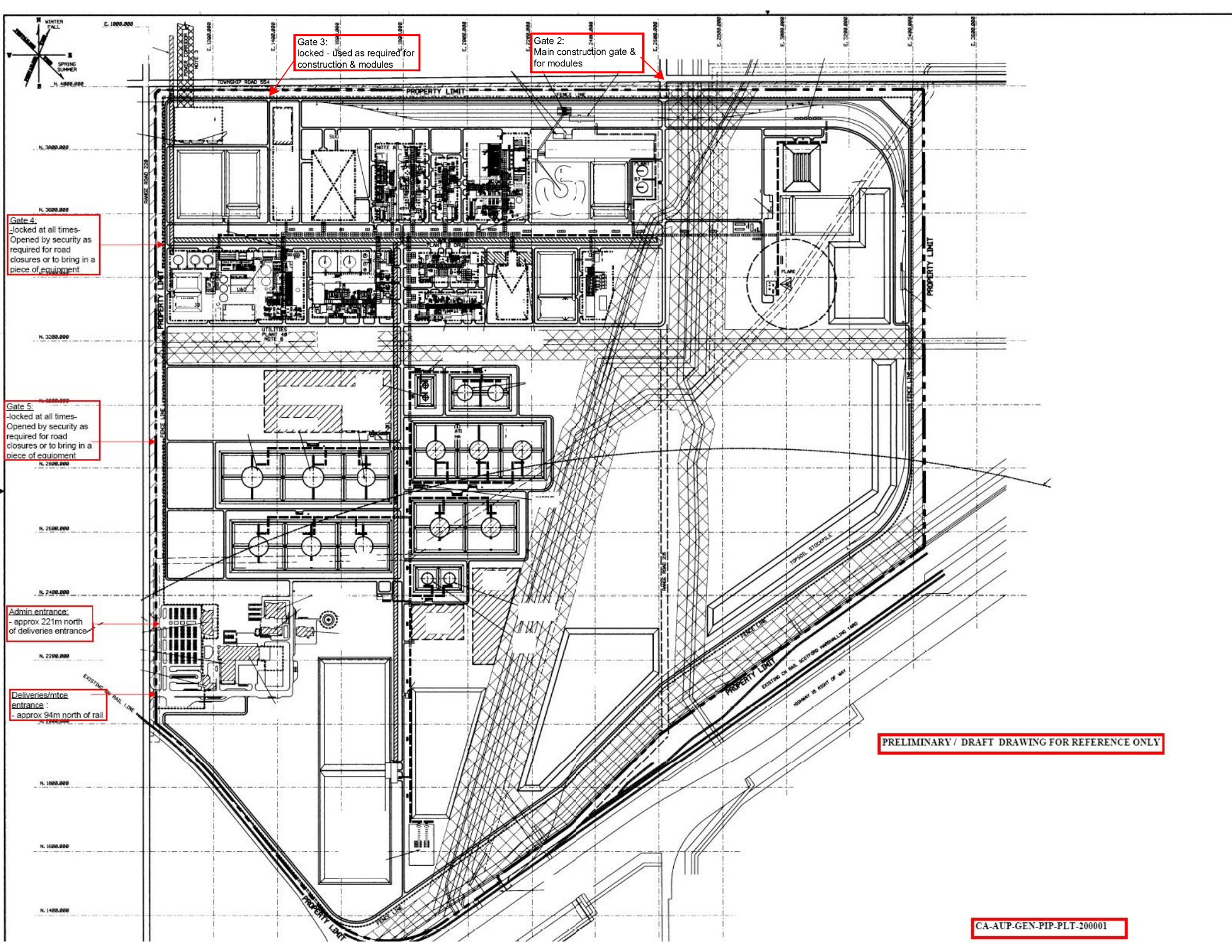
Gate 3:
locked - used as required for construction & modules
Gate 2:
Main construction gate & for modules
Gate 4:
-locked at all times-
Opened by security as required for road closures or to bring in a piece of equipment
Gate 5:
-locked at all times-
Opened by security as required for road closures or to bring in a piece of equipment
Admin entrance:
- approx 221m north of deliveries entrance
Deliveries/mtce entrance :
- approx 94m north of rail
TOWNSHIP ROAD 554
RANGE ROAD 229
RANGE ROAD 228
PROPERTY LIMIT
FENCE LINE
UTILITIES PLANT 48
TOPSOIL STOCKPILE
EXISTING CN RAIL SCOTFORD MARSHALLING YARD
HIGHWAY 15 RIGHT OF WAY
PRELIMINARY / DRAFT DRAWING FOR REFERENCE ONLY
CA-AUP-GEN-PIP-PLT-200001

NOTES: DIMENSIONS SHOWN ARE FINISHED SURFACE PAVEMENT WIDTHS. ADDITIONAL SUBGRADE WIDTHS TO BE PROVIDED TO ALLOW FOR DEPTH OF BASE COURSE AND PAVEMENT.

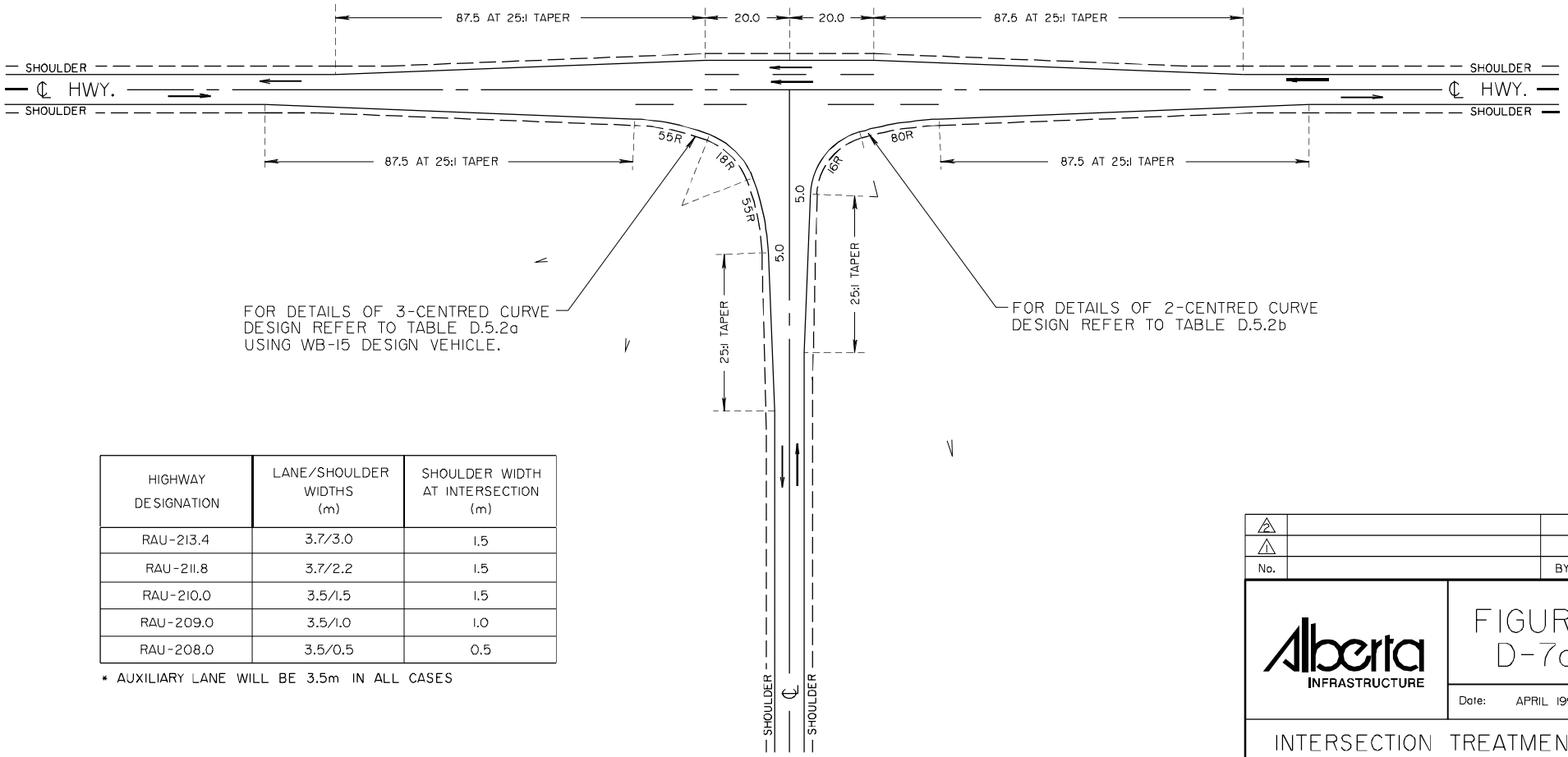

HIGHWAY DESIGNATION	LANE/SHOULDER WIDTHS (m)	SHOULDER WIDTH AT INTERSECTION (m)
RAU-213.4	3.7/3.0	1.5
RAU-211.8	3.7/2.2	1.5
RAU-210.0	3.5/1.5	1.5
RAU-209.0	3.5/1.0	1.0
RAU-208.0	3.5/0.5	0.5

* AUXILIARY LANE WILL BE 3.5m IN ALL CASES

No.		BY	DATE
2			
1			

Alberta INFRASTRUCTURE

FIGURE D-7c

Date: APRIL 1995

INTERSECTION TREATMENT (TYPE IIa) (TWO-LANE HIGHWAY)

Prepared By: R.T.	Checked By: B.K.	Scale: N.T.S.	PAGE D-117

Graphics File: deba7c.man

TABLE 1

HIGHWAY DESIGNATION	LANE*/SHOULDER WIDTHS (m)	SHOULDER WIDTH "W" AT INTERSECTION (m)
RAU-213.4	3.7/3.0	1.5
RAU-211.8	3.7/2.2	1.5
RAU-210.0	3.5/1.5	1.5
RAU-209.0	3.5/1.0	1.0
RAU-208.0	3.5/0.5	0.5

* AUXILIARY LANE WILL BE 3.5m
BYPASS LANE WIDTH WILL BE THE SAME AS THROUGH LANE.

NOTES

1. DIMENSIONS SHOWN ARE FINISHED SURFACE PAVEMENT WIDTHS. ADDITIONAL SUBGRADE WIDTHS TO BE PROVIDED TO ALLOW FOR DEPTH OF BASE COURSE AND PAVEMENT.
2. THE DESIGNER MUST COMPLETE "INTERSECTION ANALYSIS" PROCEDURE TO JUSTIFY THE TYPE IV TREATMENT.
   i.e. exclusive left turn lane must be warranted for the movement shown +

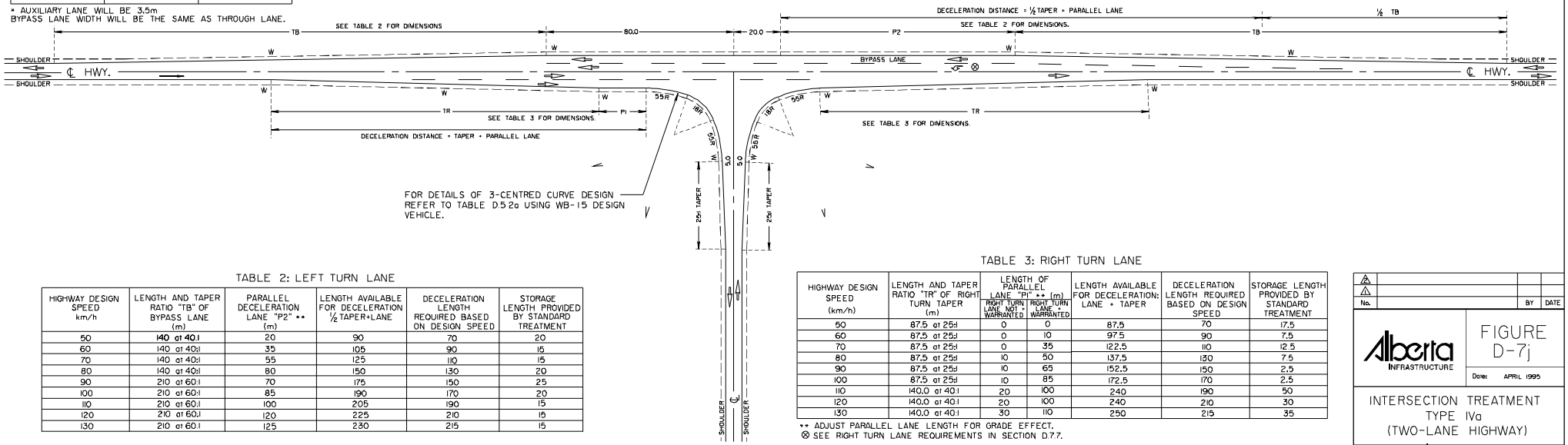

TABLE 2: LEFT TURN LANE

HIGHWAY DESIGN SPEED km/h	LENGTH AND TAPER RATIO "TB" OF BYPASS LANE (m)	PARALLEL DECELERATION LANE "P2" ** (m)	LENGTH AVAILABLE FOR DECELERATION ½ TAPER+LANE	DECELERATION LENGTH REQUIRED BASED ON DESIGN SPEED	STORAGE LENGTH PROVIDED BY STANDARD TREATMENT
50	140 at 40:1	20	90	70	20
60	140 at 40:1	35	105	90	15
70	140 at 40:1	55	125	110	15
80	140 at 40:1	80	150	130	20
90	210 at 60:1	70	175	150	25
100	210 at 60:1	85	190	170	20
110	210 at 60:1	100	205	190	15
120	210 at 60:1	120	225	210	15
130	210 at 60:1	125	230	215	15

TABLE 3: RIGHT TURN LANE

HIGHWAY DESIGN SPEED (km/h)	LENGTH AND TAPER RATIO "TR" OF RIGHT TURN TAPER (m)	LENGTH OF PARALLEL LANE "P1" ** (m)		LENGTH AVAILABLE FOR DECELERATION: LANE + TAPER	DECELERATION LENGTH REQUIRED BASED ON DESIGN SPEED	STORAGE LENGTH PROVIDED BY STANDARD TREATMENT
		RIGHT TURN LANE NOT + WARRANTED	RIGHT TURN LANE + WARRANTED			
50	87.5 at 25:1	0	0	87.5	70	17.5
60	87.5 at 25:1	0	10	97.5	90	7.5
70	87.5 at 25:1	0	35	122.5	110	12.5
80	87.5 at 25:1	10	50	137.5	130	7.5
90	87.5 at 25:1	10	65	152.5	150	2.5
100	87.5 at 25:1	10	85	172.5	170	2.5
110	140.0 at 40:1	20	100	240	190	50
120	140.0 at 40:1	20	100	240	210	30
130	140.0 at 40:1	30	110	250	215	35

** ADJUST PARALLEL LANE LENGTH FOR GRADE EFFECT.
⊗ SEE RIGHT TURN LANE REQUIREMENTS IN SECTION D.7.7.

No.		BY	DATE
2			
1			

Alberta INFRASTRUCTURE

FIGURE D-7j

Date: APRIL 1995

INTERSECTION TREATMENT TYPE IVa (TWO-LANE HIGHWAY)

Prepared By: R.T. | Checked By: B.K. | Scale: N.T.S.

Graphics File: debd7.man