Disclaimer

This Report, including the data and information contained in this Report, is provided to you on an "as is" and "as available" basis at the sole discretion of the Government of Alberta and subject to the terms and conditions of use below (the "Terms and Conditions"). The Government of Alberta has not verified this Report for accuracy and does not warrant the accuracy of, or make any other warranties or representations regarding, this Report. Furthermore, updates to this Report may not be made available. Your use of any of this Report is at your sole and absolute risk.

This Report is provided to the Government of Alberta, and the Government of Alberta has obtained a license or other authorization for use of the Reports, from:

> Shell Canada Energy, Chevron Canada Limited. and Marathon Oil Canada Corporation, for the Quest Project
>
> (collectively the "Project")

Each member of the Project expressly disclaims any representation or warranty, express or implied, as to the accuracy or completeness of the material and information contained herein, and none of them shall have any liability, regardless of any negligence or fault, for any statements contained in, or for any omissions from, this Report. Under no circumstances shall the Government of Alberta or the Project be liable for any damages, claims, causes of action, losses, legal fees or expenses, or any other cost whatsoever arising out of the use of this Report or any part thereof or the use of any other data or information on this website.

Terms and Conditions of Use

Except as indicated in these Terms and Conditions, this Report and any part thereof shall not be copied, reproduced, distributed, republished, downloaded, displayed, posted or transmitted in any form or by any means, without the prior written consent of the Government of Alberta and the Project.

The Government of Alberta's intent in posting this Report is to make them available to the public for personal and non-commercial (educational) use. You may not use this Report for any other purpose. You may reproduce data and information in this Report subject to the following conditions:

- any disclaimers that appear in this Report shall be retained in their original form and applied to the data and information reproduced from this Report
- the data and information shall not be modified from its original form
- the Project shall be identified as the original source of the data and information, while this website shall be identified as the reference source, and
- the reproduction shall not be represented as an official version of the materials reproduced, nor as having been made in affiliation with or with the endorsement of the Government of Alberta or the Project

By accessing and using this Report, you agree to indemnify and hold the Government of Alberta and the Project, and their respective employees and agents, harmless from and against any and all claims, demands, actions and costs (including legal costs on a solicitor-client basis) arising out of any breach by you of these Terms and Conditions or otherwise arising out of your use or reproduction of the data and information in this Report.

Your access to and use of this Report is subject exclusively to these Terms and Conditions and any terms and conditions contained within the Report itself, all of which you shall comply with. You will not use this Report for any purpose that is unlawful or prohibited by these Terms and Conditions. You agree that any other use of this Report means you agree to be bound by these Terms and Conditions. These Terms and Conditions are subject to modification, and you agree to review them periodically for changes. If you do not accept these Terms and Conditions you agree to immediately stop accessing this Report and destroy all copies in your possession or control.

These Terms and Conditions may change at any time, and your continued use and reproduction of this Report following any changes shall be deemed to be your acceptance of such change.

If any of these Terms and Conditions should be determined to be invalid, illegal or unenforceable for any reason by any court of competent jurisdiction then the applicable provision shall be severed and the remaining provisions of these Terms and Conditions shall survive and remain in full force and effect and continue to be binding and enforceable.

These Terms and Conditions shall: (i) be governed by and construed in accordance with the laws of the province of Alberta and you hereby submit to the exclusive jurisdiction of the Alberta courts, and (ii) ensure to the benefit of, and be binding upon, the Government of Alberta and your respective successors and assigns.

Shell Global Solutions

GS.10.52419

Quest CCS Project RAM Study – Final Report

Shell Global Solutions

Quest CCS Project RAM Study – Final Report

by

R.M. Stephens

Document History

Date	Issue	Reason for Change	Author	Approved by
November 21, 2008	Rev 1	Draft Study Basis for comments	Study Team	
December 5, 2008	Rev 2	Incorporate Compression System	Study Team	
May 5, 2010	Rev 1-2010	Incorporate Upgrades of Compression and Dehydration Systems	Ryan Stephens	
May 20, 2010	Rev 2-2010	Incorporate updated assumptions for Sensitivity Cases	Ryan Stephens	
June 24, 2010	Draft Report	Incorporate Results	Ryan Stephens	

Executive Summary

Shell Global Solutions has performed an update to the reliability study for the CO_2 capture, compression, and storage facility that has been proposed for the Scotford Upgrader. The study was used to determine the availability of the facility, identify key equipment that contributes to the downtime of the system, then use sensitivity analysis to quantify the impact of alternative design configurations. Reliability data was taken from previous studies performed for Shell Canada and other refineries.

For the Base Case, the average production efficiency was predicted to be 95.5%. The compression section contributed the majority of the losses. An alternative equipment configuration (Sensitivity 3) was considered, with air cooling changed to water cooling. The alternative configuration had an expected production efficiency of 97.6%. Several other scenarios were simulated to include the impact of the pipeline and well injection facilities, and to investigate the sparing of pumps and compressors. A lean-amine only case was also run to consider a low-CAPEX case.

Table of Contents

Document History **1**

Executive Summary **2**

1. Introduction **5**

2. Scope, Objectives, and Deliverables **6**

2.1 Objectives 6
2.2 Scope 6
2.3 Deliverables 7
2.4 General Assumptions 7
2.5 Level of Study 8
2.6 Study Input Data 8

3. Modeling Assumptions **9**

3.1 Introduction 9
3.2 Overall System Assumptions 9
3.2.1 Overall System Configuration 9
3.3 Equipment Modeling Assumptions 11
3.3.1 Introduction 11
3.3.2 Reliability Block Diagrams 11
3.3.3 CO2 Absorption Section 12
3.3.4 ADIP-X (Accelerated MDEA) Regeneration Section 13
3.3.4.1 Amine Flash Regeneration Section 13
3.3.4.2 Amine Stripper Section 14
3.3.4.3 Cooling and Filtering Section 15
3.3.5 CO_2 Compression Section 16
3.3.6 CO2 Dehydration Section 17

4. Unit Reliability Data **18**

4.1 Data Sources 19
4.2 Reliability Data Table 20
4.3 Maintenance and Operations 25
4.3.1 Work Prioritization 25
4.3.2 Mobilization and Delay Times 25
4.3.3 Restart Times 25
4.3.4 Spare Parts 25
4.3.5 Scheduled Unit Shutdowns 25

5. Base Case Results – Lean / SemiLean System with Air Cooling **26**

6. Sensitivities **30**

6.1 Overview 30
6.2 Design Class 1 (Sensitivity 1) – [Lean/SemiLean with AirCooling, Reduced Pump Redundancy] 30
6.3 Amine Regeneration Section Pump Redundancy (Sensitivity 2) - Lean/SemiLean with Air Cooling, Reduced Pump Redundancy 31
6.4 Alternative Equipment Configuration (Sensitivity 3) – Change from Air Cooling to Water Cooling 33
6.4.1 Description 33
6.4.2 Sensitivity Results 34
6.5 CO2 Export Pipeline and Injection Wells (Sensitivity 4) 35

6.5.1 Scheduled Well Shutdowns 37
6.5.2 Pigging 38
6.5.3 Pipeline/Wells Sensitivity Results 41
6.6 2x50% and 2 x 100% Spared Compressors (Sensitivity 5) – Design Class 3 41
6.7 Lean Amine Only Case (Sensitivity 6) – Low CAPEX Case 42

Appendix A. CO_2 Capture System Reliability Block Diagram 43

Bibliographic Information 50

Report distribution 51

1. Introduction

The Athabasca Oil Sands Project (AOSP) is a joint venture between Shell Canada Limited, Chevron Canada Limited and Western Oil Sands L. P. The existing AOSP ("Base Plant") was brought into operation in early 2003. The Base Plant consists of an Upstream facility at the Muskeg River Mine site and a Downstream facility (the Scotford Upgrader) located near Fort Saskatchewan. A southbound diluted bitumen ("dilbit") pipeline and a northbound diluent pipeline, owned and operated by Terasen, connect the two sites.

To position the Athabasca Oil Sands Project with the necessary stakeholder support for the initial project and for future growth, a significant voluntary commitment was made by Shell Canada to reduce the Base Plant's full cycle green house gas (GHG) emissions by 50%. The technology that will contribute to meeting this commitment is to capture CO_2 from the existing Baseplant and Expansion 1 Upgrader Hydrogen Manufacturing Units (HMUs) located at Shell's Scotford Upgrader site near Ft. Saskatchewan, Alberta.

Shell Canada is planning to build CO_2 Capture and Compression facilities to process 1.2 million tons of CO_2 per year. These facilities would capture the CO_2 produced at the Upgrader HMUs where hydrogen is produced for the conversion of bitumen to synthetic crude oil.

A high-level reliability study was performed during year 2009 to determine the overall availability of the proposed CO_2 Capture System in order to assess if any potential affect of unavailability on the HMU units.

Shell Canada has requested an update to last year's study to reflect the following design changes (to the base case):

- Equipment that has been removed:
  - Lean Amine Trim Cooler
  - 1 TEG Filter
  - TEG Surge Drum
  - TEG Still Column
- Equipment that has been added:
  - Absorber Water Wash Pumps
  - TEG KO Drum
- Compression stages have been increased from 4 to 8
  - This change increases the amount of KO Drums by 3
  - This change increases the amount of Intercoolers by 4
  - The current model includes failure modes per compression stage, in contrast to last year's model, where a single failure mode was assumed for the whole compressor.
  - All compression stages remain driven by a single electric motor.
- The Still Column and Surge Tank that were adjacent to the TEG Stripping Column were removed.

This document details the basic data, study results, and assumptions from which the reliability model of the CO_2 Capture System was constructed. The study was conducted using the reliability simulation software TARO.

2. Scope, Objectives, and Deliverables

2.1 Objectives

Shell Global Solutions (WTC) has been requested to perform an update to the reliability study of the CO_2 Capture System that was conducted during year 2009. The objective of the study is primarily to identify potential plant availability gaps and areas for improvement. This can be achieved by the following:

- Determine the availability of the proposed CO_2 Capture System
- Identify key equipment that contribute to downtime of proposed CO_2 Capture System
- Using sensitivity analysis to quantify the impact of:
    - Alternative configurations (e.g. equipment sparing)
    - Alternative failure data (e.g. reliability improvement programs)
    - Alternative maintenance schedules

2.2 Scope

The study only includes the equipment associated with the proposed CO_2 Capture System and the CO_2 Compression & Dehydration System. It assumed a constant gas feed rate as well as 100% availability of the downstream units. The following sub-systems were modeled as the Basecase:

- CO_2 Absorption
- ADIP-X (Accelerated MDEA) Regeneration
- CO_2 Compression
- CO_2 Dehydration

Several sensitivity cases have been currently identified:

- Case 1: Impact of removing pump redundancies throughout the Absorption and Regeneration sections (Design Class 1)
- Case 2: Impact of including the CO_2 export pipeline and five injection wells to the Base Case model
- Case 3: Impact of the alternative equipment configuration WaterCooling per *Quest PFDs and Equipment List (3).pdf* file received on 13 May 2010.
- Case 4: Impact of changing the amine regeneration system pumps from 2x100% to 2x50%
- Case 5: Impact of sparing the compressor train (to 2x50% and 2 x 100%) (Design Class 3)
- Case 6: Lean Only Amine availability of a low-Capex case

Chemical Injection and Utilities are part of the CO_2 capture facility, but are not considered to be critical to production (i.e. production can continue without this elements during reduced periods of time). Therefore, these systems were included in the model.

2.3 Deliverables

Key findings, conclusions and recommendations following the completion of the study were also summarized in presentation format, which were contain the following:

- Overall availability and production efficiency of CO_2 Capture System
- Criticality ranking of the equipment in the system, identifying the key contributors to lost production (downtime)
- Results of sensitivity analyses

2.4 General Assumptions

The CO_2 capture facility separates CO_2 for sequestration in a geological formation to reduce the green house gas emission from the Scotford Upgrader. The CO_2 capture facility is designed to remove CO_2 from the process gas streams of the Hydrogen Manufacturing Units (HMUs) and to further dehydrate and compress the captured CO_2 to a supercritical state to allow for efficient pipeline transportation to a suitable long-term storage site. The CO_2 capture scope includes three HMUs, two identical existing HMU trains in the base Upgrader and one being designed as part of the Upgrader Expansion 1 project.

The CO_2 is removed from the HMU "syngas" by contacting the mixed gas stream of methane, carbon dioxide, carbon monoxide and hydrogen, with accelerated MDEA (ADIP-X). Three amine absorbers used to remove the CO_2 will be situated in the HMUs upstream of the pressure swing absorber (PSA) block. The CO_2 is separated from the amine in a common amine regeneration process that produces 99% pure CO_2 at a pressure slightly above atmospheric pressure. The purified CO_2 stream will then be compressed and dehydrated to a supercritical state by a multi-stage compressor and then transported via pipeline to off-site disposition. The purified CO_2 stream can then be used in Enhanced Oil Recovery (EOR) and sequestration.

The following assumptions have been made for the modeling of the CO_2 Capture System:

The table below shows the expected inlet Feed Gas flowrates:

Table 2-1: Inlet Feed Gas Flowrates

Flow to Unit	Tag ID	Feed Gas Flow		Feed Gas CO_2 Content	
		Kmol/hr	tons/hr	Kmol/hr	tons/hr
Amine Absorber #1	C-1	7,189.7	316.3	1,187.0	52.2
Amine Absorber #2	C-2	7,189.7	316.3	1,187.0	52.2
Amine Absorber #3	C-3	10,321.0	454.1	1,745.3	76.8
Total		**24,700.4**	**1,086.7**	**4,119.3**	**181.2**

Shell Canada Energy operates two existing Hydrogen Manufacturing Units (HMU1 & HMU2) and is in the process of designing and constructing a 3rd HMU (Expansion 1 HMU) at the AOSP Scotford Upgrader.

The CO_2 Capture System is designed to process 1,086.7 tonnes/hour of CO_2 rich hydrogen gas:

- C-1 and C-2 absorbers are each designed to treat 316.3 tonnes/hour of CO_2 rich hydrogen gas from HMU1 and HMU2

- C-3 absorber is designed to treat 454.1 tonnes/hour of CO_2 rich hydrogen gas from HMU3
- It is based on the Design that 80% of the Feed Gas CO_2 is removed – 145 tonnes/hr (1.2 MTPY)
- It is assumed that there is a 100% availability of the upstream gas feed and downstream units

Base Case premises include:

- System Life: 25 years
- Start date: 2015
- Number of simulations: 200

2.5 Level of Study

Failure modes were defined on an equipment level (i.e. not on a component level). For each production critical equipment item, the model includes one or more failure modes depending on the utilized data source. The equipment was characterized through the frequency and duration of equipment outages. This equipment could be characterized by a number of failure modes.

2.6 Study Input Data

The study is based on the following data provided by the project team:

- Updated project PFDs for the proposed CO_2 Capture System issued on 30 September 2009, supplied by Shell Canada – Lean /SemiLean Case
- Updated PFDs issued in June 2010 - Lean Only Case
- The reliability data from previous studies

3. Modeling Assumptions

3.1 Introduction

This section contains the assumptions used to create the simulation life-cycle models for this analysis. It consists of the following sections:

- Section 3.2: Overall System Assumptions
- Section 3.3: Equipment Modeling Assumptions

3.2 Overall System Assumptions

3.2.1 Overall System Configuration

The CO_2 Capture System model was divided into the following groups, representing the unit's processing sections: The following systems were modeled:

- CO_2 Absorption
  - Absorber #1 feed from HMU 1
  - Absorber #2 feed from HMU 2
  - Absorber #3 feed from HMU 3
- ADIP-X (Accelerated MDEA) Regeneration
  - Semi-Lean Still
  - Amine Stripper
- CO_2 Compression & Dehydration
  - 8-stage compression
  - TEG Dehydration
- Base Case is predominately Air Cooled due to Cooling Water availability limitations in 2009

Figures 1 and 2 depict the configuration of the CO_2 Capture System that was modeled in the Base Case.

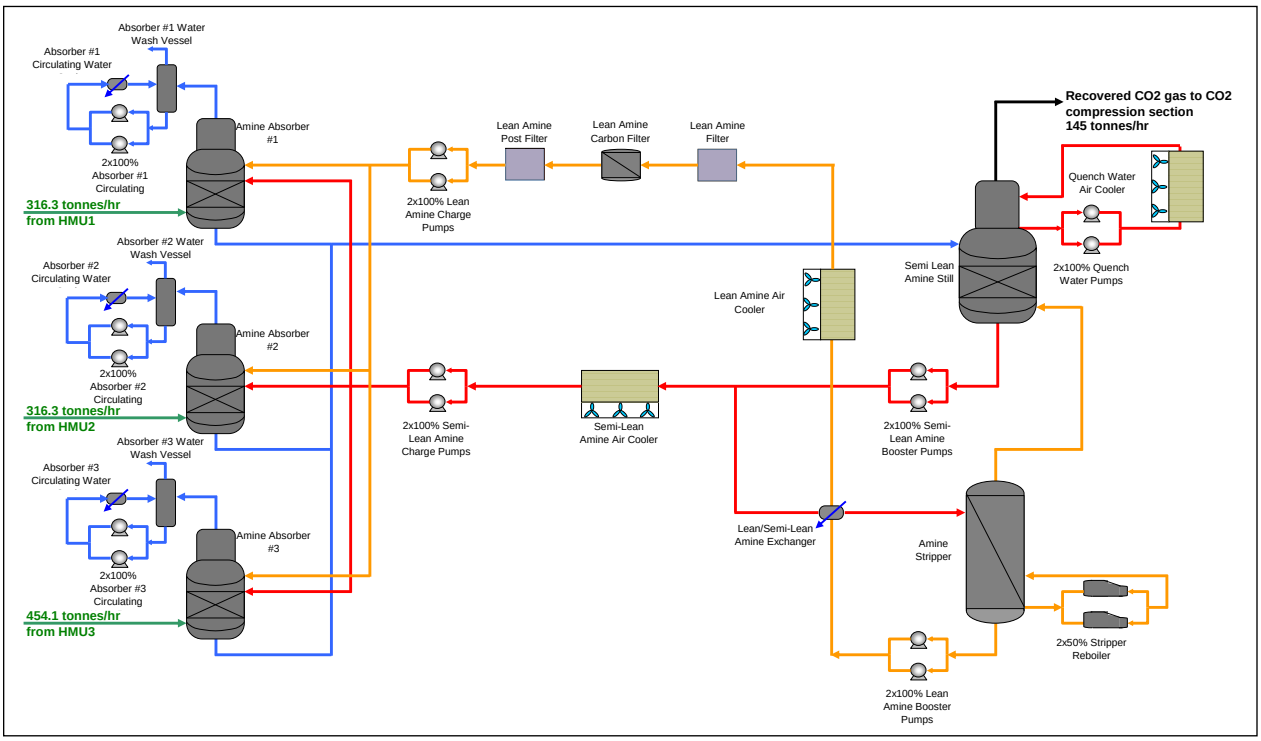

Figure 1: CO_2 Absorption Section Block Flow Diagram.

The CO_2 Absorption Section is shown in Figure 1 and the CO_2 Compression and Dehydration Sections are shown in Figure 2.

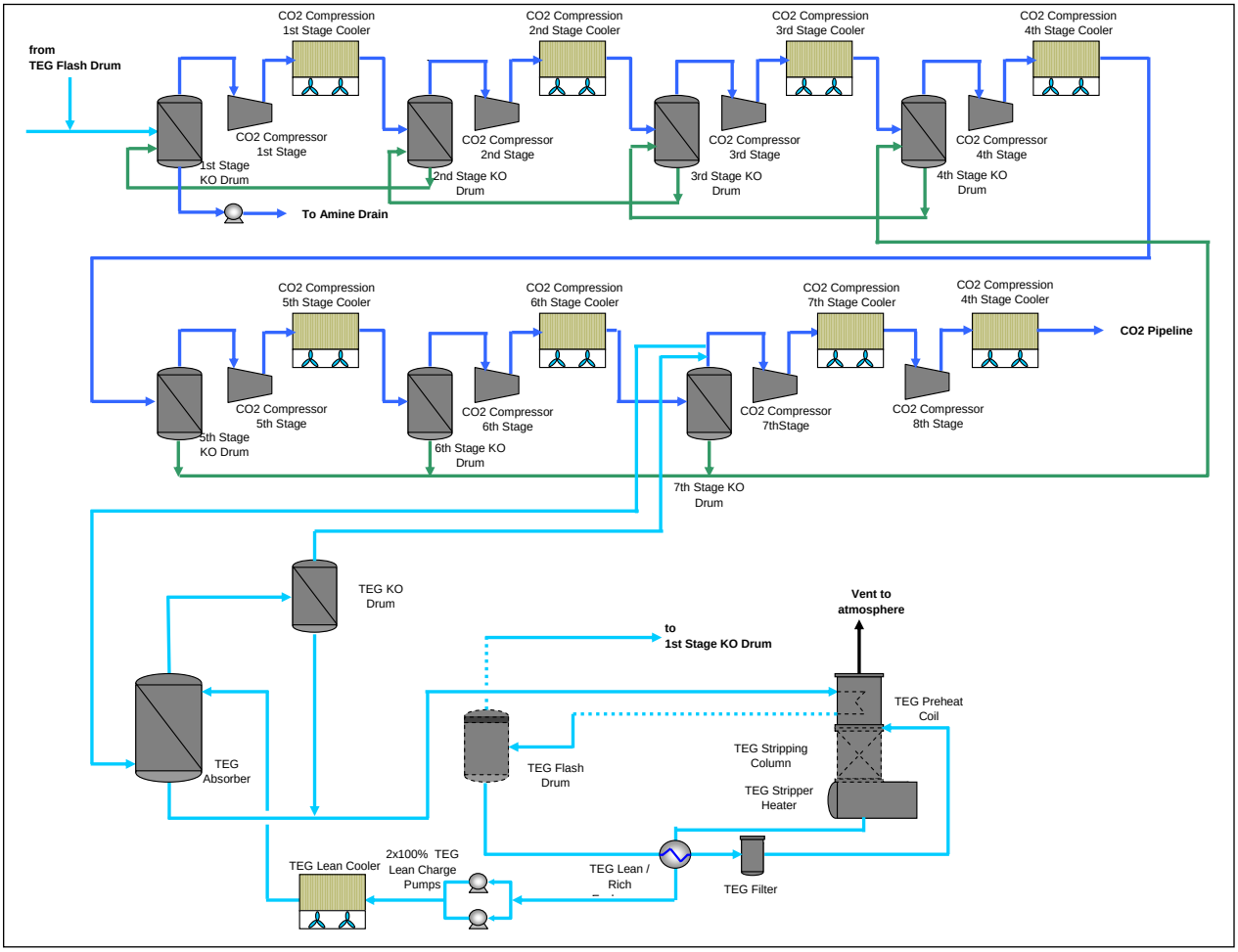

Figure 2: CO_2 Compression & Dehydration Section Block Flow Diagram.

3.3 Equipment Modeling Assumptions

3.3.1 Introduction

All equipment listed in this section is assumed to be critical to production unless otherwise indicated. For all equipment that has redundancy, it is assumed that there is only sufficient equipment online to allow 100% throughput. For example, if there are 3 x 50% pumps, it is assumed that there are two active and one passive (standby) spare pump.

3.3.2 Reliability Block Diagrams

To understand the impact that loss of a system or component will have on the performance of the unit, the process flow diagrams (PFDs) of the CO_2 Capture System sections were translated into a series of logic dependency models or reliability block diagrams (RBDs). RBDs graphically depict the interaction of equipment from a reliability perspective and do not necessarily indicate the actual physical connections or process flow. In addition to depicting interaction from a reliability perspective, RBDs are also used to illustrate the following:

- Equipment redundancy – duty/duty versus duty/standby for spared equipment

- Equipment configuration – series or parallel arrangement
- Equipment capacity – 2 x 50% versus 2 x 100%, etc.

Appendix A of this Study Basis contains detailed RBDs for the CO_2 Capture System. These RBDs should be reviewed in conjunction with the assumptions listed in the following Study Basis sections.

In the following sections, each of the CO_2 Capture System sub-systems is discussed in detail, covering equipment configuration, sparing and criticality.

3.3.3 CO2 Absorption Section

Two separate syngas streams from HMU1 and HMU2 are fed to the bottom of Amine Absorber #1 (C-1) and Amine Absorber #2 (C-2), respectively, whilst Syngas streams from expansion HMU (HMU3) is fed to the bottom of Amine Absorber #3 (C-3). A combined stream of semi-lean amine and loaded amine from the top section first treats these feed gas streams in the bottom section of their respective columns. Semi-lean amine is introduced on the distribution tray in the middle part of the column. This distribution tray also receives loaded amine from the collector tray in top section.

Lean amine solution enters the contactors at the top of the tower and absorbs the remaining CO_2 from the gas that has been treated in the bottom sections to achieve an overall 80% CO_2 removal from these columns.

Rich amine leaves the bottom of all three absorber columns under level control. Rich amine streams from the three amine absorbers are combined in a single line. The combined rich amine line is depressurized and fed to the low pressure still in the regeneration section.

The treated gas streams from the amine absorbers are cooled in their respective gas coolers Absorber #1/2/3 Circulating Water Cooler (E-1/2/3) to 35 °C to meet treated gas temperature requirement. This temperature is the same as the feed gas temperature. Therefore, the CO_2 capture facility will not be increasing the temperature of PSA inlet gas streams coming from the HMUs. To prevent amine carryover with the treated gas, Absorber #1/2/3 Water Wash Vessel (V-1/2/3) will be installed downstream of the gas coolers for the three treated gas streams.

The table below shows the equipment to be included in the CO_2 Absorption Section:

Table 3-1: CO_2 Absorption Section Equipment

Equipment	Tag ID	Configuration	Comment
Amine Absorber #1	C-1	1×100%	Processes 29% of total Hydrogen flow to system
Absorber #1 Circulating Water Cooler	E-1	1×100%	Plate & Frame Heat Exchanger
Absorber #1 Water Wash Vessel	V-1	1×100%	Low Pressure Vessel
Absorber #1 Circulating Water Pumps	P-8 A/B	2x100%	Centrifugal, motor driven pumps
Amine Absorber #2	C-2	1×100%	Processes 29% of total Hydrogen flow to system
Absorber #2 Circulating Water Cooler	E-2	1×100%	Plate & Frame Heat Exchanger
Absorber #2 Water Wash Vessel	V-2	1×100%	Low Pressure Vessel
Absorber #2 Circulating Water Pumps	P-9 A/B	2x100%	Centrifugal, motor driven pumps
Amine Absorber #3	C-3	1×100%	Processes 42% of total Hydrogen flow to system
Absorber #3 Circulating Water Cooler	E-3	1×100%	Plate & Frame Heat Exchanger
Absorber #3 Water Wash Vessel	V-3	1×100%	Low Pressure Vessel
Absorber #3 Circulating Water Pumps	P-10 A/B	2x100%	Centrifugal, motor driven pumps

3.3.4 ADIP-X (Accelerated MDEA) Regeneration Section

3.3.4.1 Amine Flash Regeneration Section

The combined rich amine from the absorbers is treated in the regeneration section where CO_2 is stripped from the solution. The regeneration section is a combination of flash regeneration and steam stripping. Rich amine is removed from the absorber bottoms on level control and collected in a common line. Pressure control valves on the common rich amine line will de-pressurize the amine stream before it is fed to the Semi-Lean Amine Still (C-5) for CO_2 flash de-sorption; and the Anti-Foam will be added to the stream by the Amine Regeneration Anti-Foam Injection Tank (T-5) and Pumps (P-13A/B). To increase the effectiveness of flash regeneration, vapors from the Amine Stripper (C-4) are used to add heat to the flash section. The vapors are contacted with the flash liquid by a packed bed. The flash regeneration section is located at the bottom of the Semi-Lean Amine Still. The top portion of the still is the rectifying section of the amine regeneration system with a pump-around quench system, consisting of Quench Water Pumps (P-3A/B) and Quench Water Air Cooler (E-8). The stripped and washed gases leave the top of the column as recovered CO_2 gas and are sent to CO_2 compression section - CO_2 compression and dehydration are not in the scope of amine unit.

The rich amine liquid flowing down the packed bed is contacted with the hot vapors to improve CO_2 de-sorption. The flashed rich amine is collected at the bottom of the semi-lean still and is removed on level control as semi-lean amine. CO_2 loading of the amine solution is reduced in the flash section. Semi-lean amine from the bottom of the flash still is sent to Semi-Lean Amine Booster Pumps (P-1A/B). The semi-lean amine bottoms stream is split after the pressure is boosted in these pumps where 26.35% of the flow goes to the Amine Stripper (C-4) and the remaining 73.65% is returned to the Amine Absorbers (C-1/2/3). The semi-lean amine stream to

the amine absorbers is cooled by the Semi-Lean Amine Air Cooler (E-4) and pumped by Semi-Lean Charge Pumps (P-5A/B). Semi-lean amine is fed to the three amine absorbers on flow control.

The table below shows the equipment to be included in the Amine Flash Regeneration Section:

Table 3-2: Amine Flash Regeneration Section Equipment

Equipment	Tag ID	Configuration	Comment
Semi Lean Amine Still	C-5	1×100%	
Quench Water Pumps	P-3 A/B	2x100%	Centrifugal, motor driven pumps
Quench Water Air Cooler	E-8	1×100%	Air Cooler – 1 bay, 2×50% fans/motors
Semi-Lean Amine Booster Pumps	P-1 A/B	2x100%	Centrifugal, motor driven pumps
Semi-Lean Amine Air Cooler	E-4	1×100%	Air Cooler – 1 bay, 2×50% fans/motors
Semi-Lean Amine Charge Pumps	P-5 A/B	2x100%	Centrifugal, motor driven pumps
Amine Regeneration Anti-Foam Injection Tank	T-5	1×100%	Not Critical
Amine Regeneration Anti-Foam Injection Pumps	P-13 A/B	2x100%	Not Critical

3.3.4.2 Amine Stripper Section

The semi-lean stream to the Amine Stripper (C-4) is fed to the column on flow control. This stream first passes through the Lean/Semi-Lean Amine Exchanger (E-5) where it is heated by hot lean amine. Then it is enhanced with Amine and Piperazine from the respective Make-Up Tanks (T-1/2) and Pumps (P-7/78). The heated semi-lean amine from the heat exchanger then goes through a flow control valve before entering the Amine Stripper at the top of the column.

In the Amine Stripper the acid gas (CO_2) in the amine is removed by stripping steam. Acid gases are removed from the amine solution by a combination of high temperature, low pressure, and stripping steam (to reduce the acid gas partial pressure). Steam generated by re-boiling the solvent provides:

i. Heat for raising the temperature of the feed (semi-lean amine)
ii. Heat of de-sorption of the acid gas
iii. Heat to generate stripping steam (to reduce the acid gas partial pressure)

The heat for generating stripping steam in the Stripper Reboiler (E-7A/B) is provided by low pressure steam. The gas stripped from the amine solution leaves the top of the stripper column and flows to Semi-Lean Amine Still (C-5). The regenerated lean amine leaves the bottom of the stripper column and is pumped by the Lean Amine Booster Pumps (P-2A/B) to the Lean/Semi-Lean Amine Exchanger (E-5) to cool the regenerated lean amine, before entering the Cooling and Filtering Section.

The table below shows the equipment to be included in the Amine Stripper Section:

Table 3-3: Amine Stripper Section Equipment

Equipment	Tag ID	Configuration	Comment
Lean/Semi-Lean Amine Exchanger	E-5	1×100%	Plate & Frame Heat Exchanger
Amine Stripper	C-4	1×100%	
Stripper Reboiler	E-7 A/B	2×50%	S&T Exchanger (Kettle BKT Type)
Lean Amine Booster Pumps	P-2 A/B	2x100%	Centrifugal, motor driven pumps
Amine Make-Up Tank	T-1	1×100%	Not Critical
Amine Make-Up Pump	P-7	1×100%	Not Critical
Piperazine Make-Up Tank	T-2	1×100%	Not Critical
Piperazine Make-Up Pump	P-78	1×100%	Not Critical

3.3.4.3 Cooling and Filtering Section

The cooled, regenerated lean amine from the Lean/Semi-Lean Amine Exchanger (E-5) is further cooled in the Lean Amine Air Cooler (E-6) to 35 °C. The temperature of the lean amine supplied to the Amine Absorbers must be at the correct temperature, otherwise the absorption of CO_2 may be negatively affected.

The cooled lean amine is treated in the filtration section before it is returned to the Amine Absorbers. The filtration section consists of one main particulate filter, Lean Amine Filter (F-1) followed by a slipstream Lean Amine Carbon Filter (D-1) and its after particulate filter, Lean Amine Post Filter (F-2).

The filtered lean amine is finally pumped back to the Amine Absorbers by Lean Amine Charge Pump (P-4A/B). Before entering the Amine Absorbers, the filtered lean amine is then treated with Anti-Foam, from the Anti-Foam Injection Tanks (T-3/4) and the Anti-Foam Injection Pumps (P-11A/B and P-12A/B).

The table below shows the equipment included in the Cooling and Filtering Section:

Table 3-4: Cooling and Filtering Section Equipment

Equipment	Tag ID	Configuration	Comment
Lean Amine Air Cooler	E-6	1×100%	Air Cooler – 1 bay, 2×50% fans/motors
Lean Amine Trim Cooler	E-7	1×100%	S&T Heat Exchanger
Lean Amine Filter	F-1	1×100%	Not Critical, can be bypassed
Lean Amine Carbon Filter	D-1	1×100%	Not Critical, can be bypassed
Lean Amine Post Filter	F-2	1×100%	Not Critical, can be bypassed
Lean Amine Charge Pumps	P-4 A/B	2x100%	Centrifugal, motor driven pumps
Absorber #1/2 Anti-Foam Injection Tank	T-3	1×100%	Not Critical
Absorber #3 Anti-Foam Injection Tank	T-4	1×100%	Not Critical
Absorber #1/2 Anti-Foam Injection Pumps	P-12 A/B	2x100%	Not Critical
Absorber #1/2 Anti-Foam Injection Pumps	P-12 A/B	2x100%	Not Critical

3.3.5 CO_2 Compression Section

The purpose of the CO_2 compression unit is to compress the purified CO_2 stream from ~ 150 KPa to ~ 14,500 KPa.

The 99.0% pure wet CO_2 from the top of the Semi Lean Amine Still (C-5) is routed to the suction of the CO_2 compression unit, 1st Stage KO Drum (V-5). Compression is accomplished by utilizing the 8-stage centrifugal CO_2 Compressor (K-1/1-8) driven by an electric motor. The compressor is a standard configuration utilizing interstage KO Drums (V-5 thru 11) and interstage aerial coolers (E-9 thru 16). Normal operation results in a small amount of water being continuously condensed out in the interstage coolers that is collected in the interstage KO drums and then routed back to a KO drum of a lower compression stage. For purposes of the modeling study, each compression stage was modeled with its own failure modes.

In the event of a failure/shutdown of the compression/dehydration system, the CO_2 from the Semi Lean Amine Still (C-5) can be diverted to the Vent Stack (S-1). However, there is no information on restrictions to venting. If the venting is unlimited, the compression/dehydration system becomes a non-critical system with regards to the CO_2 Capture System, as it does not have a direct impact, due to the bypass venting system.

The table below shows the equipment included in the CO_2 Compression Section:

Table 3-5: CO_2 Compression Section Equipment

Equipment	Tag ID	Configuration	Comment
1st Stage KO Drum	V-5	1×100%	Low Pressure Vessel
CO_2 Compressor	K-1/1-8	1×100%	8-Stage Centrifugal, electric motor drive
1st Stage Cooler	E-9	1×100%	Air Cooler – 1 bay, 2×50% fans/motors
2nd Stage KO Drum	V-6	1×100%	Low Pressure Vessel
2nd Stage Cooler	E-10	1×100%	Air Cooler – 1 bay, 2×50% fans/motors
3rd Stage KO Drum	V-7	1×100%	Low Pressure Vessel
3rd Stage Cooler	E-11	1×100%	Air Cooler – 1 bay, 2×50% fans/motors
4th Stage KO Drum	V-8	1×100%	Low Pressure Vessel
4th Stage Cooler	E-12	1×100%	Air Cooler – 1 bay, 2×50% fans/motors
5th Stage KO Drum	V-9	1×100%	Low Pressure Vessel
5th Stage Cooler	E-13	1×100%	Air Cooler – 1 bay, 2×50% fans/motors
6th Stage KO Drum	V-10	1×100%	Low Pressure Vessel
6th Stage Cooler	E-14	1×100%	Air Cooler – 1 bay, 2×50% fans/motors
7th Stage KO Drum	V-11	1×100%	Low Pressure Vessel
7th Stage Cooler	E-15	1×100%	Air Cooler – 1 bay, 2×50% fans/motors
8th Stage Cooler	E-16	1×100%	Air Cooler – 1 bay, 2×50% fans/motors
1st Stage Pre-Compressor KO Drum Pump	P-14	1×100%	Not Critical

3.3.6 CO2 Dehydration Section

The product CO_2 stream leaving the Shell facility is required to have a water content of less than 450 mg/Sm^3. This is to ensure that a separate liquid water phase does not form anywhere in the pipeline system as it can lead to hydrates formation or accelerated corrosion. The CO_2 dehydration facility is a standard TEG unit that processes gas from the 7th Stage KO Drum (V-11). The CO_2 Dehydration Section removes water from the CO_2 stream to a specified value.

A lean TEG stream contacts the wet CO_2 stream in the TEG Absorber (C-20) where the lean TEG absorbs water from the gas and the dried gas with a water content of less than 450 mg/Sm^3 is then routed back to the suction of the 7th stage of compression.

The rich TEG is routed through the TEG Pre-Heat Coil (E-20) located in the top section of the regeneration stripping column. The preheated rich TEG is then routed to the TEG Flash Drum (V-20), where significant quantities of CO_2 vapors are removed and recycled back to the CO_2 compressor 1st stage suction to reduce the amount of CO_2 vapors emitted to the atmosphere. The flashed rich TEG is then routed to the TEG Lean/Rich Exchanger (E-22), where it is preheated prior to introduction into the TEG Stripping Column (C-21). The rich TEG is contacted with stripping vapors in the TEG Stripping Column and the absorbed water is removed during this contact process. The TEG Stripper Heater (E-21) uses de-superheated high pressure steam as its heat medium. The vapors from the TEG Stripper Column that is predominately water and CO_2 are vented to atmosphere. The hot lean TEG from the bottom of the TEG Stripper Column is then routed through the TEG Lean/Rich Exchanger and cooled. The cooled lean TEG is then routed to the Lean TEG Charge Pumps (P-20A/B) where the pressure is increased and then cooled further in the TEG Lean Cooler (E-23). The cooled TEG is then recycled back to the TEG Absorber.

The dried CO_2 stream from the TEG Absorber (C-20) is routed to the TEG KO Drum (V+21), and then back to the suction of the 7th stage of compression, 7th Stage KO Drum (V-11). The Dry CO_2 is compressed in the last two compression stages, before being cooled in the respective CO_2 Compression Coolers (E-15 and E-16). The cooled, dry, CO_2 is then exported to the pipeline. The bottoms from the 7th Stage KO Drum is combined with the bottoms from the other KO drums in the compression stage and routed to the 4th Stage KO Drum (V-8).

The table below shows the equipment included in the CO_2 Dehydration Section:

Table 3-6: CO_2 Dehydration Section Equipment

Equipment	Tag ID	Configuration	Comment
TEG Absorber	C-20	1×100%	
TEG KO Drum	V-21	1×100%	Low Pressure Vessel
TEG Pre-Heat Coil	E-20	1×100%	
TEG Flash Drum	V-20	1×100%	Low Pressure Vessel
TEG Filter	F-20	1×100%	
TEG Lean/Rich Exchanger	E-22	1×100%	S&T Heat Exchanger
TEG Stripping Column	C-21	1×100%	
TEG Stripper Heater	E-21	1×100%	Coil
TEG Lean Pump	P-20 A/B	2x100%	Centrifugal, motor driven pumps
TEG Lean Cooler	E-23	1×100%	Air Cooler – 1 bay, 2×50% fans/motors
TEG Make-Up Tank	T-8	1×100%	Not Critical
TEG Make-Up Pump	P-82	1×100%	Not Critical

4. Unit Reliability Data

The reliability model for the CO_2 Capture System was developed using previous failure data from similar projects.

Below is a brief explanation of the terms used in the failure data tables:

MTTF: Mean Time to Failure (years)
The average time between consecutive failures calculated by dividing the cumulative observed time by the total number of failures. This term only applies to components with exponential failure distributions.

MTTR: Mean Time to Repair (hours)
It is a measure of the average time taken to diagnose and restore failed equipment to an operational state. If the failure data is reported on the equipment level, this value includes any logistic delays. If only the minimum MTTR was given, then a constant repair time was used. If Minimum and Maximum values were present, then a rectangular distribution was used and the repair duration varied between the two values. If three values are given (Minimum, maximum and Most Likely) then a triangular distribution was used, and the repair time varied between the minimum and maximum values with an increased probability of being close to the Most Likely repair time.

Impact on Unit Rate
It indicates if the failure causes a total shutdown of the system (100%) or a slowdown. If a slowdown is indicated then the rate reduction is shown as percentages (1% to 99%) of the design flow rate through the unit.

When reviewing the reliability data in the next section the following should be noted:

- The failure rates are for critical failures only, i.e. those requiring the equipment to be taken offline immediately to allow repair, prior to resuming normal production. In addition to these critical failures, equipment can also incur incipient failures, which do not require immediate repair of the equipment (for example small leakages). For modeling purposes, it is assumed that these incipient failures can be accommodated until the next plant turnaround at which time they are repaired. These failures have therefore not been included in the simulation models.
- The failure modes used reflect the average number of times a piece of equipment causes total or partial production loss. In order to achieve these ‘expected’ equipment failure rates, it is assumed that industry standard inspection and maintenance activities are carried out during plant turnarounds.
- Process equipment blocks modeled include equipment plus typical instrumentation (level alarms, pressure control, high temperature, etc.). In other words, the failure data represents an overall reliability figure for each piece of equipment, at the equipment level, rather than individual component level.

4.1 Data Sources

Failure data for equipment utilized in the Shell Canada, CO_2 Capture System have been collected from the following sources:

- Reliability database from Shell Canada projects
- Reliability database from previous Shell projects

The following sections summarize the failure data for the process specific equipment in the CO_2 Capture System. For simulation purposes, the expected MTTF is used. Variations in the MTTF may be further investigated in sensitivity cases. The MTTR is the total repair time associated with the failed equipment.

4.2 Reliability Data Table

The table below shows the failure data that were used for the equipment in the CO_2 Capture System Base Case model.

Table 4-1: Failure Data for the CO_2 Absorption Sections

CO_2 Capture Unit Equipment	Tag ID	Failure Mode	MTTF (Years)	MTTR (hrs)		Impact on Equipment	Annual equivalent downtime	Source
			Years	Min	Max	%	hours	
Amine Absorber #1	C-1	Column Failure	98.0	143.0		100%	1.5	SHELL Montreal - Failure data is average of all vessel types
Absorber #1 Circulating Water Cooler	E-1	Exchanger Failure	35.0	144.0		100%	4.1	PAR HCU2 FED2 Category B S&T Data
Absorber #1 Water Wash Vessel	V-1	Vessel Failure	98.0	143.0		100%	1.5	SHELL Montreal - Failure data is average of all vessel types
Absorber #1 Circulating Water Pump	P-8A/B	Pump Failure	4.6	81.0		100%	17.8	Generic PAR Pump Data
		Electric Motor Failure	18.0	72.0	168.0	100%	6.7	Previous Studies
Amine Absorber #2	C-2	Column Failure	98.0	143.0		100%	1.5	SHELL Montreal - Failure data is average of all vessel types
Absorber #2 Circulating Water Cooler	E-2	Exchanger Failure	35.0	144.0		100%	4.1	PAR HCU2 FED2 Category B S&T Data
Absorber #2 Water Wash Vessel	V-2	Vessel Failure	98.0	143.0		100%	1.5	SHELL Montreal - Failure data is average of all vessel types
Absorber #2 Circulating Water Pump	P-9A/B	Pump Failure	4.6	81.0		100%	17.8	Generic PAR Pump Data
		Electric Motor Failure	18.0	72.0	168.0	100%	6.7	Previous Studies
Amine Absorber #3	C-3	Column Failure	98.0	143.0		100%	1.5	SHELL Montreal - Failure data is average of all vessel types
Absorber #3 Circulating Water Cooler	E-3	Exchanger Failure	35.0	144.0		100%	4.1	PAR HCU2 FED2 Category B S&T Data

CO_2 Capture Unit Equipment	Tag ID	Failure Mode	MTTF (Years)	MTTR (hrs)		Impact on Equipment	Annual equivalent downtime	Source
			Years	Min	Max	%	hours	
Absorber #3 Water Wash Vessel	V-3	Vessel Failure	98.0	143.0		100%	1.5	SHELL Montreal - Failure data is average of all vessel types
Absorber #3 Circulating Water Pump	P-10A/B	Pump Failure	4.6	81.0		100%	17.8	Generic PAR Pump Data
		Electric Motor Failure	18.0	72.0	168.0	100%	6.7	Previous Studies
Semi Lean Amine Still	C-5	Column Failure	98.0	143.0		100%	1.5	SHELL Montreal - Failure data is average of all vessel types
Quench Water Pumps	P-3A/B	Pump Failure	4.6	81.0		100%	17.8	Generic PAR Pump Data
		Electric Motor Failure	18.0	72.0	168.0	100%	6.7	Previous Studies
Quench Water Air Cooler	E-8	Air Cooler Failure	75.0	144.0		100%	1.9	Scotford Upgrader
		Fan/Motor/Belt	3.0	48.0	72.0	100%	20.0	
Semi-Lean Amine Booster Pumps	P-1A/B	Pump Failure	4.6	32.0		100%	7.0	Shell Montreal Feed/Booster Pumps
		Electric Motor Failure	18.0	72.0	168.0	100%	6.7	Previous Studies
Semi-Lean Amine Air Cooler	E-4	Air Cooler Failure	75.0	144.0		100%	1.9	Scotford Upgrader
		Fan/Motor/Belt	3.0	48.0	72.0	100%	20.0	
Semi-Lean Amine Charge Pumps	P-5A/B	Pump Failure	4.6	32.0		100%	7.0	Shell Montreal Feed/Booster Pumps
		Electric Motor Failure	18.0	72.0	168.0	100%	6.7	Previous Studies
Lean/Semi-Lean Amine Exchanger	E-5	Exchanger Failure	35.0	144.0		100%	4.1	PAR HCU2 FED2 Category B S&T Data **(HOLD)** *
Amine Stripper	C-4	Column Failure	98.0	143.0		100%	1.5	SHELL Montreal - Failure data is average of all vessel types
Stripper Reboiler	E-7A/B	Exchanger Failure	100.0	144.0		100%	1.4	PAR Category A S&T Data

CO_2 Capture Unit Equipment	Tag ID	Failure Mode	MTTF (Years)	MTTR (hrs)		Impact on Equipment	Annual equivalent downtime	Source
			Years	Min	Max	%	hours	
Lean Amine Booster Pumps	P-2A/B	Pump Failure	4.6	32.0		100%	7.0	Shell Montreal Feed/Booster Pumps
		Electric Motor Failure	18.0	72.0	168.0	100%	6.7	Previous Studies
Lean Amine Air Cooler	E-6	Air Cooler Failure	75.0	144.0		100%	1.9	Scotford Upgrader
		Fan/Motor/Belt	3.0	48.0	72.0	100%	20.0	
Lean Amine Trim Cooler	E-7	Exchanger Failure	35.0	144.0		100%	4.1	PAR HCU2 FED2 Category B S&T Data
Lean Amine Filter	F-1	Filter Failure	100.0	24.0		0%	0.2	Previous Studies
Lean Amine Carbon Filter	D-1	Filter Failure	100.0	24.0		0%	0.2	Previous Studies
Lean Amine Post Filter	F-2	Filter Failure	100.0	24.0		0%	0.2	Previous Studies
Lean Amine Charge Pumps	P-4A/B	Pump Failure	4.6	32.0		100%	7.0	Shell Montreal Feed/Booster Pumps
		Electric Motor Failure	18.0	72.0	168.0	100%	6.7	Previous Studies

Note that no data is available for Frame & Plate Heat Exchanger (E-5), therefore, Shell Port Arthur S&T data has been used.

* Temporary assumption, pending vendor data for this exchanger (Jeff)

Table 4-2: Failure Data for the CO_2 Compression and Dehydration Sections

CO_2 Compression & Dehydration System Equipment	Tag ID	Failure Mode	MTTF (Years)	MTTR (hrs)		Impact on Equipment	Annual equivalent downtime	Source
			Years	Min	Max	%	hours	
1st Stage KO Drum	V-5	Vessel Failure	98.0	143.0		100%	1.5	SHELL Montreal - Failure data is average of all vessel types
CO_2 Compressor (each stage was modeled with a separate failure mode)	K-1/1-4	Compressor Failure	20.0	168.0		100%	8.4	PAR HCU2 FED2 Category A Centrifugal Compressor Data
		Motor Failure	10.0	78.0		100%	7.8	PAR Category A S&T Data
CO_2 Compression 1st Stage Cooler	E-9	Air Cooler Failure	75.0	144.0		100%	1.9	Scotford Upgrader
		Fan/Motor/Belt	3.0	48.0	72.0	100%	20.0	
2nd Stage KO Drum	V-6	Vessel Failure	98.0	143.0		100%	1.5	SHELL Montreal - Failure data is average of all vessel types
CO_2 Compression 2nd Stage Cooler	E-10	Air Cooler Failure	75.0	144.0		100%	1.9	Scotford Upgrader
		Fan/Motor/Belt	3.0	48.0	72.0	100%	20.0	
3rd Stage KO Drum	V-7	Vessel Failure	98.0	143.0		100%	1.5	SHELL Montreal - Failure data is average of all vessel types
CO_2 Compression 3rd Stage Cooler	E-11	Air Cooler Failure	75.0	144.0		100%	1.9	Scotford Upgrader
		Fan/Motor/Belt	3.0	48.0	72.0	100%	20.0	
4th Stage KO Drum	V-8	Vessel Failure	98.0	143.0		100%	1.5	SHELL Montreal - Failure data is average of all vessel types
CO_2 Compression 4th Stage Cooler	E-12	Air Cooler Failure	75.0	144.0		100%	1.9	Scotford Upgrader
		Fan/Motor/Belt	3.0	48.0	72.0	100%	20.0	
5th Stage KO Drum	V-9	Vessel Failure	98.0	143.0		100%	1.5	SHELL Montreal - Failure data is average of all vessel types
CO_2 Compression 5th Stage Cooler	E-13	Air Cooler Failure	75.0	144.0		100%	1.9	Scotford Upgrader
		Fan/Motor/Belt	3.0	48.0	72.0	100%	20.0	
6th Stage KO Drum	V-10	Vessel Failure	98.0	143.0		100%	1.5	SHELL Montreal - Failure data is average of all vessel types

CO_2 Compression & Dehydration System Equipment	Tag ID	Failure Mode	MTTF (Years)	MTTR (hrs)		Impact on Equipment	Annual equivalent downtime	Source
			Years	Min	Max	%	hours	
CO_2 Compression 6th Stage Cooler	E-14	Air Cooler Failure	75.0	144.0		100%	1.9	Scotford Upgrader
		Fan/Motor/Belt	3.0	48.0	72.0	100%	20.0	
7th Stage KO Drum	V-11	Vessel Failure	98.0	143.0		100%	1.5	SHELL Montreal - Failure data is average of all vessel types
CO_2 Compression 7th Stage Cooler	E-15	Air Cooler Failure	75.0	144.0		100%	1.9	Scotford Upgrader
		Fan/Motor/Belt	3.0	48.0	72.0	100%	20.0	
CO_2 Compression 8th Stage Cooler	E-16	Air Cooler Failure	75.0	144.0		100%	1.9	Scotford Upgrader
		Fan/Motor/Belt	3.0	48.0	72.0	100%	20.0	
TEG Absorber	C-20	Column Failure	98.0	143.0		100%	1.5	SHELL Montreal - Failure data is average of all vessel types
TEG Pre-Heat Coil	E-20	Exchanger Failure	35.0	144.0		100%	4.1	PAR HCU2 FED2 Category B S&T Data
TEG Flash Drum	V-20	Vessel Failure	98.0	143.0		100%	1.5	SHELL Montreal - Failure data is average of all vessel types
TEG Filter	F-20	Filter Failure	100.0	24.0		100%	0.2	Previous Studies
TEG Lean/Rich Exchanger	E-22	Exchanger Failure	35.0	144.0		100%	4.1	PAR HCU2 FED2 Category B S&T Data
TEG Refrigeration Stripping Column	C-21	Column Failure	98.0	143.0		100%	1.5	SHELL Montreal - Failure data is average of all vessel types
TEG Stripper Heater	E-21	Exchanger Failure	35.0	144.0		100%	4.1	PAR HCU2 FED2 Category B S&T Data
TEG KO Drum	V-21	Vessel Failure	98.0	143.0		100%	1.5	SHELL Montreal - Failure data is average of all vessel types
TEG Lean Pump	P-20A/B	Pump Failure	4.6	32.0		100%	7.0	Shell Montreal Feed/Booster Pumps
		Electric Motor Failure	18.0	72.0	168.0	100%	6.7	Previous Studies
TEG Lean Cooler	E-23	Air Cooler Failure	75.0	144.0		100%	1.9	Scotford Upgrader
		Fan/Motor/Belt	3.0	48.0	72.0	100%	20.0	

4.3 Maintenance and Operations

The following are the assumptions used for modeling maintenance activities/constraints for the CO_2 Capture System:

4.3.1 Work Prioritization

Maintenance/repair activities are only carried out for items that have failed critically and will result in either unit shutdown or production slow down. It was assumed that all incipient type failures (failures which do not impact on production rates) will be addressed on an opportunity basis (i.e. they will be addressed if the unit is down for other reasons).

4.3.2 Mobilization and Delay Times

The CO_2 Capture System is a continuous processing unit operated 24 hours per day. Critical failures, i.e. those failures that result in loss of capacity at failure were assumed to require immediate mobilization of a repair crew. A delay time of 4 hours will be incurred when mobilizing maintenance personnel (from failure to start of repair).

It was assumed that the failure data in the previous section will not incorporate any mobilization time required for repairs.

4.3.3 Restart Times

The failure data for the individual unspared equipment reported in the previous section include any restart times of the equipment/unit.

4.3.4 Spare Parts

The model assumes that spares are available to enable immediate repair of all equipment.

4.3.5 Scheduled Unit Shutdowns

It was assumed that scheduled maintenance will take place in line with the HMU scheduled maintenance shutdowns. The Base Case did not include scheduled maintenance shutdowns.

5. Base Case Results – Lean / SemiLean System with Air Cooling

The base case efficiency results are contained in Table 5-1. The average efficiency of CO_2 exported to pipeline is 95.5%. This is a slight increase from the 2009 study results (95.1%). The average supply efficiency loss of 4.5% is equivalent to 16 days downtime per annum. The CO_2 supply to the export pipeline is at maximum capacity for 92.6% of the time, equivalent to 338 days per annum.

Table 5-1: CO2 Capture System Efficiency Results

CO2 Capture System Parameters	
Average CO2 Production Efficiency	95.5% +/-0.2%
	348.7 days
Average Production Losses	4.5%
	16.3 days
Period during which maximum capacity is available	92.6%
	337.9 days

The overall CO_2 Capture System section is predicted to be in a state of complete shutdown for 1.6% of the time. The system was operating at reduced capacity for 2.9% of the time. The Vent Stack is used for the equivalent of 13 days, due to the slowdown and shutdown of the Compression & Dehydration sections. Results are summarized in Table 5-2.

Table 5-2: CO_2 Capture System Loss Breakdown

CO2 Capture System Loss Breakdown	
Complete Compression & Dehydration Shutdown	1.6%
	5.8 days
Average Complete Compression & Dehydration Shutdowns per annum	1.0
Average Compression & Dehydration Shutdown Duration	150 hours
Unit Slowdown (equivalent)	2.9%
	10.5 days
Average Utilization of Vent stack Bypass (equivalent)	3.5%
	12.7 days

The 4.5% efficiency losses are broken down by the three main subsystems in Table 5-3. The majority of the losses are due to the compression section (3%).

Table 5-3: Loss Breakdown by Section Contribution

Loss Breakdown by Section Contribution	% loss	tonnes/hr
Losses Due to Capture Section	1.0%	1.4
Losses Due to Compression Section	3.0%	4.4
Losses Due to Dehydration Section	0.5%	0.7
Total	**4.5%**	**6.5**

The contributions of individual equipment items to the losses in each subsystem (Capture Section, Compression Section, and Dehydration Section) are displayed in Figure 3, Figure 4, and Figure 5, respectively.

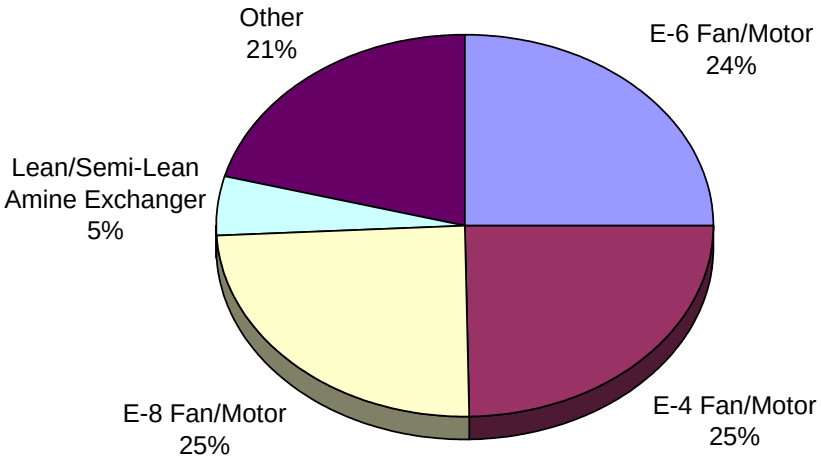

Figure 3: Base Case Capture Section Losses Breakdown

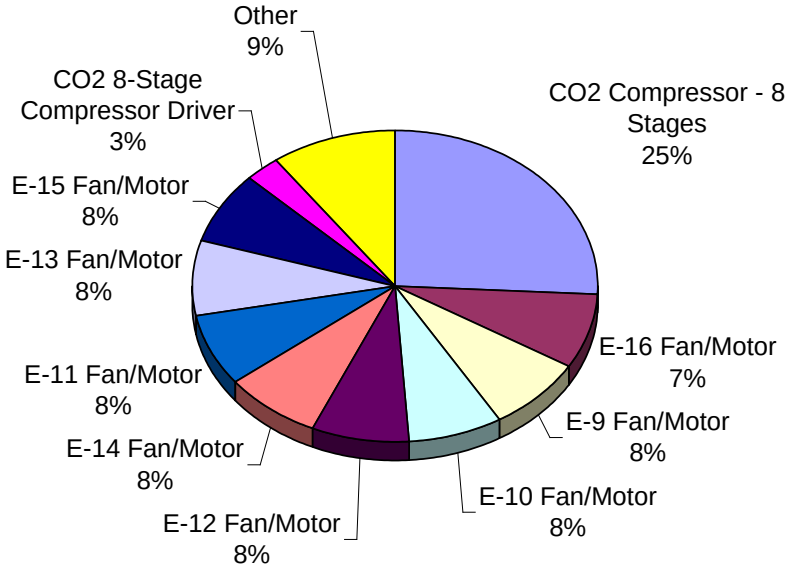

Figure 4: Base Case Compression Section Losses Breakdown.

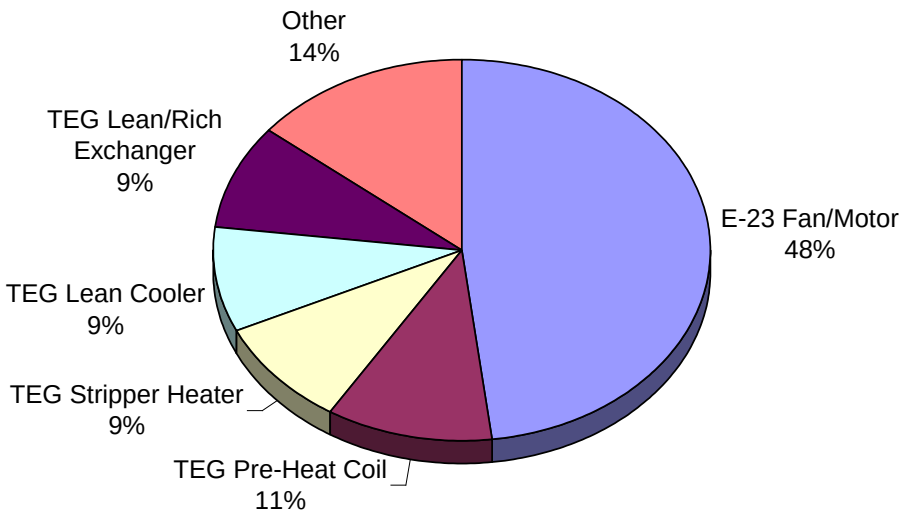

Figure 5: Base Case Dehydration Section Losses Breakdown.

The availability loss attributed to each category is tabulated in Table 5-4. The fan and motor components in the compression section have the greatest effect on the system availability. The compressor reliability had a significant impact as well, with 0.8% of the losses.

Table 5-4: Base Case Loss Breakdown by Equipment Type

Category	Availability Loss (%)
Fan/Motor - Compression Section	1.9
Compressor	0.8
Fan/Motor - Capture Section	0.7
Fan/Motor - Dehydration Section	0.2
Air Cooler - Compression Section	0.2
S&T Exchanger	0.1
Vessel - KO Drum	0.1
Plate & Frame	0.1
Compressor Drive	0.1
Air Cooler - Capture Section	0.1
Air Cooler - Dehydration Section	0.0
Column - Capture Section	0.0
Vessel - TEG Drum	0.0
Column - Dehydration Section	0.0
S&T Kettle Type Exchanger	0.0
Vessel - Wash Vessel	0.0
Column - Amine Absorber	0.0
Filter	0.0
Pump	0.0

As the reliability predictions were made with a stochastic, event-driven simulator, a distribution of expected production efficiencies was obtained. The histogram and cumulative distribution functions are plotted in Figure 6 and Figure 7, for a project life of 10 and 25 years. The P50 value of production efficiency over a 25 year time period is 95.5%, and the P10 and P90 values are 95.0% and 96.0%, respectively. Over a 10 year time period, the expected performance is more subject to stochastic fluctuations, so the P10 and P90 values are more spread out (94.8% and 96.2%, respectively).

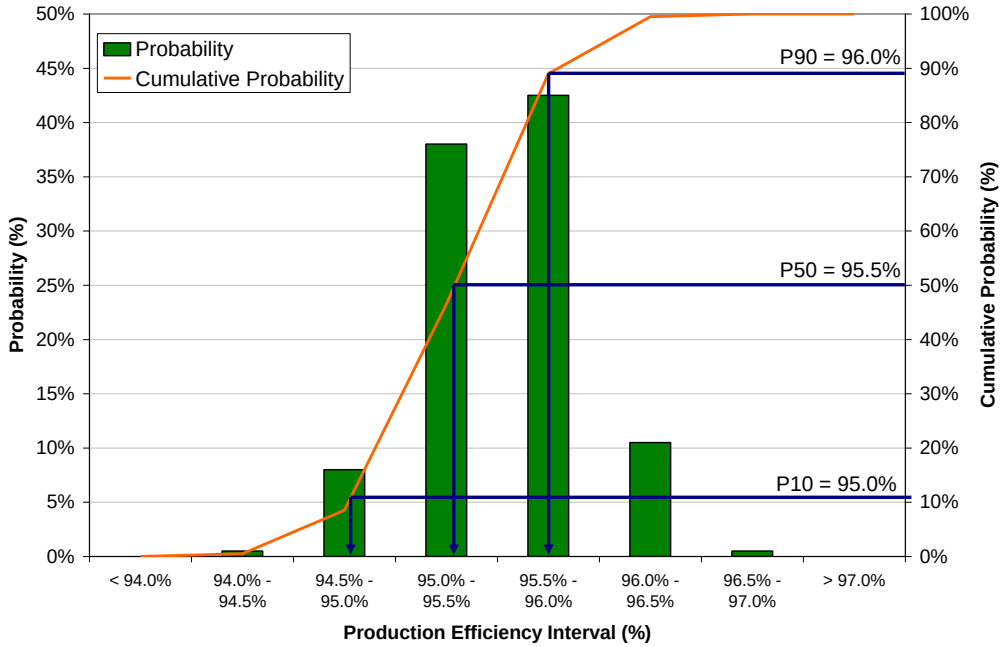

Figure 6: Base Case Distribution of Production Efficiency (25 years).

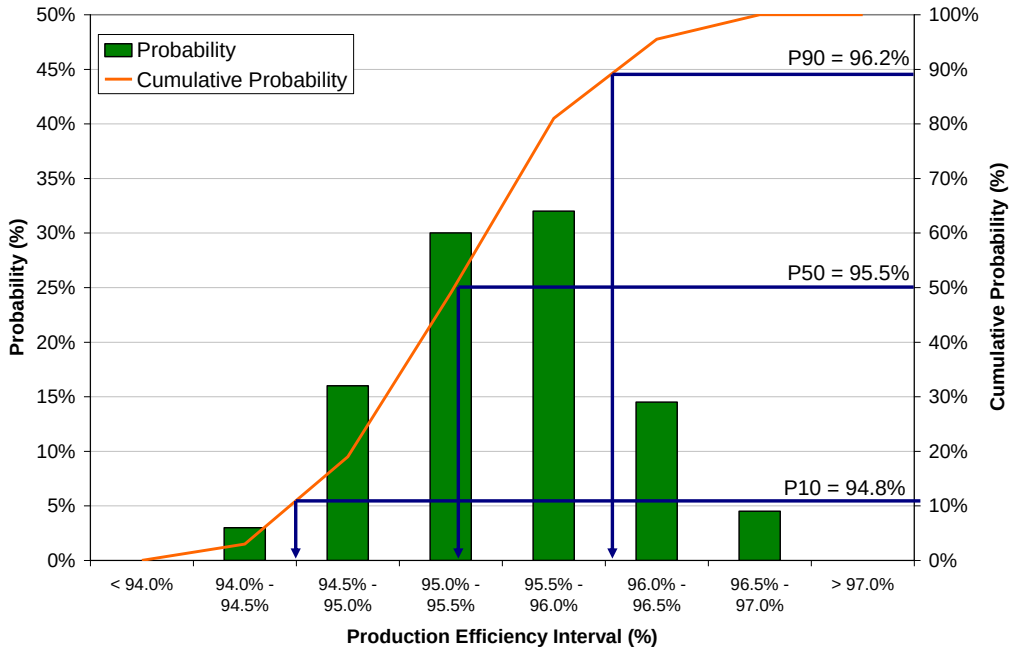

Figure 7: Base Case Distribution of Production Efficiency (10 years).

6. Sensitivities

6.1 Overview

Six sensitivity cases were run to investigate various other options for the CO2 capture and compression facility. The cases are defined in

Table 6-1: Design Class 1 Sensitivity

Case	Description
Sensitivity 1	Removed one spare pump from Quench Water Pumps, Semi-Lean Amine Booster Pumps, Semi-Lean Amine Charge Pumps, Lean Amine Booster Pumps, and Lean Amine Charge Pumps
Sensitivity 2	Reduced sparing to 2x50% for pumps in the amine regeneration section
Sensitivity 3	Alternative equipment configuration—changed from air cooling to water cooling
Sensitivity 4	Included downstream effects of CO2 pipeline and wells
Sensitivity 5	Calculated impact of 2x50% and 2x100% sparing of compressor trains
Sensitivity 6	Lean amine only case

6.2 Design Class 1 (Sensitivity 1) – [Lean/SemiLean with AirCooling, Reduced Pump Redundancy]

The following table shows the Design Class 1 sensitivity that was carried out using the Base Case model. The effect of sparing of the listed pumps was assessed.

Table 6-1: Design Class 1 Sensitivity

Equipment	Tag ID	Configuration	
		Base Case	Design Class 1
Quench Water Pumps	P-3A/B	2x100%	1×100%
Semi-Lean Amine Booster Pumps	P-1A/B	2x100%	1×100%
Semi-Lean Amine Charge Pumps	P-5A/B	2x100%	1×100%
Lean Amine Booster Pumps	P-2A/B	2x100%	1×100%
Lean Amine Charge Pumps	P-4A/B	2x100%	1×100%

For Design Class 1, the average efficiency of CO_2 exported to pipeline is 94.6%. There is an additional 0.9% throughput loss from the Base Case because of reduced pump redundancy. The average supply efficiency loss of 5.4% is equivalent to 20 days downtime per annum. The CO_2 supply to the export pipeline is at maximum capacity for 91.6% of the time, equivalent to 334 days per annum.

Table 6-2: Design Class 1 Results Summary

CO2 Capture System Parameters	Sensitivity	Base Case	Delta
Average CO2 Production Efficiency	94.6% +/-0.2%	95.5% +/-0.2%	-1.0%
	345.2 days	348.7 days	-3.5 days
Average Production Losses	5.4%	4.5%	1.0%
	19.8 days	16.3 days	3.5 days
Period during which maximum capacity is available	91.6%	92.6%	-0.9%
	334.4 days	337.9 days	-3.5 days

The reduction in pump redundancy results in a 0.9% increase in throughput losses, all of which occur within the “pump” category in the category criticality list.

Table 6-3: Equipment Category Criticality for Design Class 1

Category	Availability Loss (%)	Delta
Fan/Motor - Compression Unit	1.9	0.0
Pump	1.0	0.9
Compressor	0.8	0.0
Fan/Motor - Capture Unit	0.7	0.0
Fan/Motor - Dehydration Unit	0.2	0.0
Air Cooler - Compression Unit	0.2	0.0
S&T Exchanger	0.1	0.0
Vessel - KO Drum	0.1	0.0
Plate & Frame	0.1	0.0
Compressor Drive	0.1	0.0
Air Cooler - Capture Unit	0.1	0.0
Air Cooler - Dehydration Unit	0.1	0.0
Column - Capture Unit	0.0	0.0
Column - Dehydration Unit	0.0	0.0
Vessel - TEG Drum	0.0	0.0
S&T Kettle Type Exchanger	0.0	0.0
Vessel - Wash Vessel	0.0	0.0
Column - Amine Absorber	0.0	0.0
Filter	0.0	0.0

6.3 Amine Regeneration Section Pump Redundancy (Sensitivity 2) - Lean/SemiLean with Air Cooling, Reduced Pump Redundancy

The following table shows the Amine Regeneration Section Pump Redundancy sensitivity that was carried out using the assumptions of the Base Case model. The effect of sparing of the listed pumps was assessed.

Table 6-4: Amine Regeneration Section Pump Redundancy Sensitivity

Equipment	Tag ID	Configuration	
		Base Case	Design Class 1
Semi-Lean Amine Booster Pumps	P-1A/B	2x100%	2x50%
Semi-Lean Amine Charge Pumps	P-5A/B	2x100%	2x50%
Lean Amine Booster Pumps	P-2A/B	2x100%	2x50%
Lean Amine Charge Pumps	P-4A/B	2x100%	2x50%

In this sensitivity, the average efficiency of CO_2 exported to pipeline is 94.9%. There is an additional 0.6% throughput loss from the Base Case because of reduced pump redundancy. The average supply efficiency loss of 5.1% is equivalent to 19 days downtime per annum. The CO_2 supply to the export pipeline is at maximum capacity for 91.3% of the time, equivalent to 333 days per annum

Table 6-5: Pump Redundancy Sensitivity Results Summary

CO2 Capture System Parameters	Sensitivity	Base Case	Delta
Average CO2 Production Efficiency	94.9% +/-0.2%	95.5% +/-0.2%	-0.6%
	346.4 days	348.7 days	-2.3 days
Average Production Losses	5.1%	4.5%	0.6%
	18.6 days	16.3 days	2.3 days
Period during which maximum capacity is available	91.3%	92.6%	-1.2%
	333.4 days	337.9 days	-4.5 days

The reduction in amine regeneration pump redundancy contributes to the 0.6% increase in production losses. The far-right column in Table 6-6 shows the change between this sensitivity case and the base case.

Table 6-6: Equipment Category Criticality for the Pump Redundancy Sensitivity Case

Category	Availability Loss (%)	Delta
Fan/Motor - Compression Unit	1.9	0.0
Compressor	0.8	0.0
Fan/Motor - Capture Unit	0.7	0.0
Pump	0.7	0.6
Fan/Motor - Dehydration Unit	0.2	0.0
Air Cooler - Compression Unit	0.2	0.0
S&T Exchanger	0.1	0.0
Vessel - KO Drum	0.1	0.0
Plate & Frame	0.1	0.0
Compressor Drive	0.1	0.0
Air Cooler - Capture Unit	0.1	0.0
Air Cooler - Dehydration Unit	0.0	0.0
Column - Capture Unit	0.0	0.0
Vessel - TEG Drum	0.0	0.0
Column - Dehydration Unit	0.0	0.0
S&T Kettle Type Exchanger	0.0	0.0
Vessel - Wash Vessel	0.0	0.0
Column - Amine Absorber	0.0	0.0
Filter	0.0	0.0

The impact of pump sparing in the amine redundancy sensitivity case is shown in Figure 8. To produce Figure 8, simulations were run with the pumps spared at 2x100% (Base Case), 2x75%, and 2x50%.

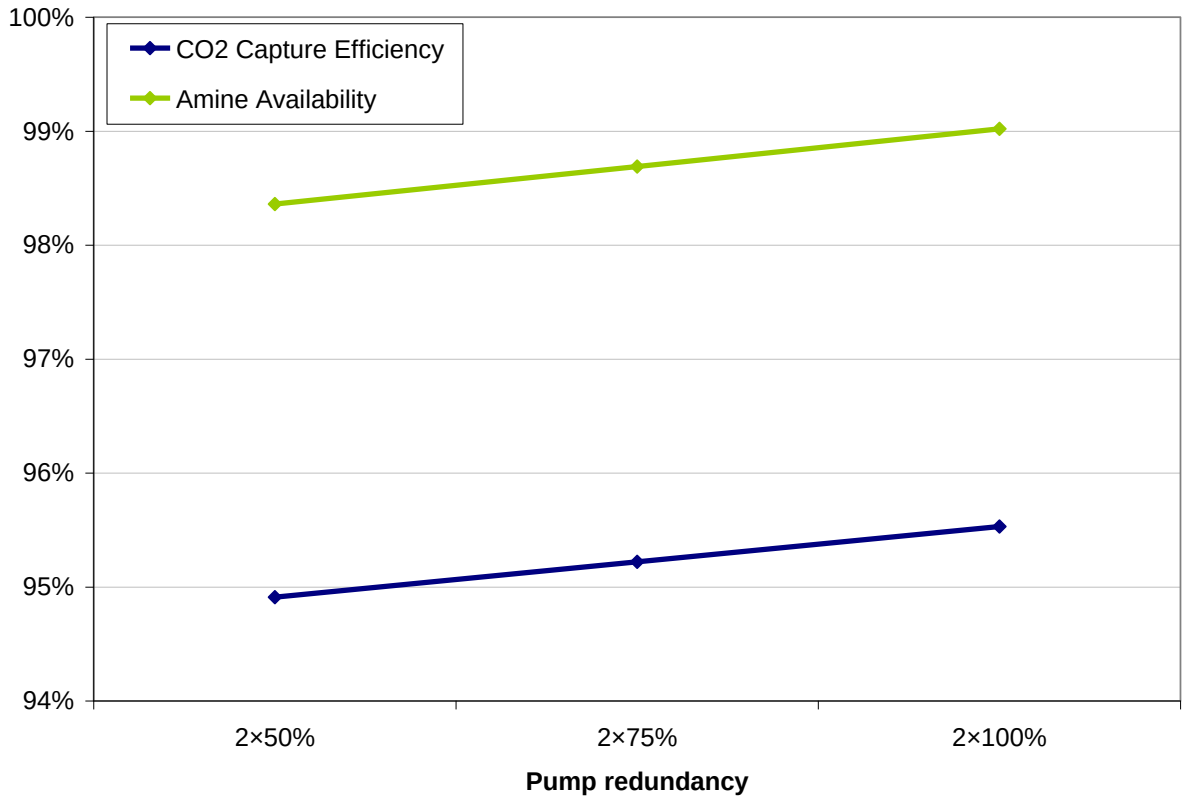

Figure 8: Effect of pump redundancy on Amine System Availability and CO2 Capture Efficiency.

6.4 Alternative Equipment Configuration (Sensitivity 3) – Change from Air Cooling to Water Cooling

6.4.1 Description

An alternative equipment configuration has been provided by Shell Canada, as file *Quest PFDs and Equipment List (3).pdf*, received on 13 May 2010.

The key differences between the base case and the current sensitivity model are as follows:

- Absorber Circulating Water Coolers (E-1/2/3) are Shell & Tube, instead of Plate and Frame
- Water Make-Up Air Cooler (E-440X1) and Water Make-Up Booster Pumps (P-440X2 A/B) were added as water make-up feed to the Absorber #3 Water Wash Vessel and were considered critical to production
- The Lean Amine Cooler (E-6 A/B/C/D), Quench Water Cooler (E-8), and Semi-Lean Amine Cooler (E-4) in the Amine Regeneration Section are Plate and Frame, instead of Air Coolers

- The Stripper Reboiler Condensate Pots (V-24503 A/B) are added to the Amine Regeneration section
- Coolers in the CO_2 Compression Section are Shell & Tube, instead of Air Coolers, except for the Compressor 8th Stage Cooler (E-16)
- The Compressor 7th Stage Cooler (E-15) is deleted
- The TEG Stripper Heater Condensate Pot (V-24521) is added to the TEG Dehydration Section

The Power Recovery Turbine Package that is included in the alternative equipment configuration was not considered critical to production, as it is not believed that the CO_2 Carbon Capture System will be shut down upon failure of this package. If the impact of such package is believed to be significant, it can be included in the model, once Shell Canada has provided the predicted relationship between production efficiency and the Power Recovery Turbine Package.

Utilities and Chemical Injection equipment were not addressed.

6.4.2 Sensitivity Results

In this sensitivity, the average efficiency of CO_2 exported to pipeline is 97.6%. There is a 2.1% production efficiency increase from the Base Case mainly because of the replacement of Air Coolers with Plate & Frame and Shell & Tube Coolers.

- Air Cooler availability = 99.76%
- Shell & Tube / Plate & Frame availability = 99.96%

The average supply efficiency loss of 2.4% is equivalent to 9 days downtime per annum. The CO_2 supply to the export pipeline is at maximum capacity for 96.9% of the time, equivalent to 354 days per annum.

Table 6-7: Sensitivity 3 Results Summary

CO2 Capture System Parameters	Sensitivity	Base Case	Delta
Average CO2 Production Efficiency	97.6% +/-0.1%	95.5% +/-0.2%	2.1%
	356.3 days	348.7 days	7.6 days
Average Production Losses	2.4%	4.5%	-2.1%
	8.7 days	16.3 days	-7.6 days
Period during which maximum capacity is available	96.9%	92.6%	4.3%
	353.6 days	337.9 days	15.7 days

The 2.4% efficiency loss is broken down by section in Table 6-8:

- 0.3% of the losses are due to the CO_2 Capture section – showing a 0.7% reduction in losses (as compared to the Base Case)
- 1.6% of the losses are due to the CO_2 Compression section – showing a 1.4% reduction in losses
- 0.5% of the losses are due to the CO_2 Dehydration section – remaining unchanged, as no heat exchangers were changed in the Dehydration section

Table 6-8: Sensitivity 3 – Losses Broken Down by Section

Loss Breakdown by Section Contribution	% loss	tonnes/hr
Losses Due to Capture Section	0.3%	0.5
Losses Due to Compression Section	1.6%	2.3
Losses Due to Dehydration Section	0.5%	0.7
Total	**2.4%**	**3.5**

Changing the Air Coolers to Shell & Tube or Plate & Frame Exchangers reduced losses by 2.1%. The equipment category criticality is contained in Table 6-9.

Table 6-9: Equipment Category Criticality for Sensitivity 3

Category	Availability Loss (%)	Delta
Compressor	0.8	0.0
S&T Exchanger	0.5	0.4
Fan/Motor - Compression Unit	0.2	-1.6
Fan/Motor - Dehydration Unit	0.2	0.0
Plate & Frame	0.1	0.0
Vessel - KO Drum	0.1	0.0
Compressor Drive	0.1	0.0
Vessel - TEG Drum	0.1	0.0
Air Cooler - Dehydration Unit	0.0	0.0
Column - Capture Unit	0.0	0.0
Vessel - Wash Vessel	0.0	0.0
Column - Dehydration Unit	0.0	0.0
Air Cooler - Compression Unit	0.0	-0.2
S&T Kettle Type Exchanger	0.0	0.0
Column - Amine Absorber	0.0	0.0
Air Cooler - Capture Unit	0.0	-0.1
Filter	0.0	0.0
Pump	0.0	0.0
Fan/Motor - Capture Unit	0.0	-0.7

6.5 CO2 Export Pipeline and Injection Wells (Sensitivity 4)

The wellsite and pipelines are also part of the Scotford CO2 Capture System, and will be considered an integrated system in conjunction with the compressor. The flow of the process is that the dehydrated dense phase CO_2 exits the compressor and enters the pipeline in the Scotford facility boundaries. Once the pipeline exits Scotford, it will travel to the injection facilities. The anticipated length of the pipeline is between 50km and 100km, with a diameter of NPS 10 to NPS 16.

Figure 9 depicts the CO_2 Export Pipeline and Injection Wells Section that were modeled.

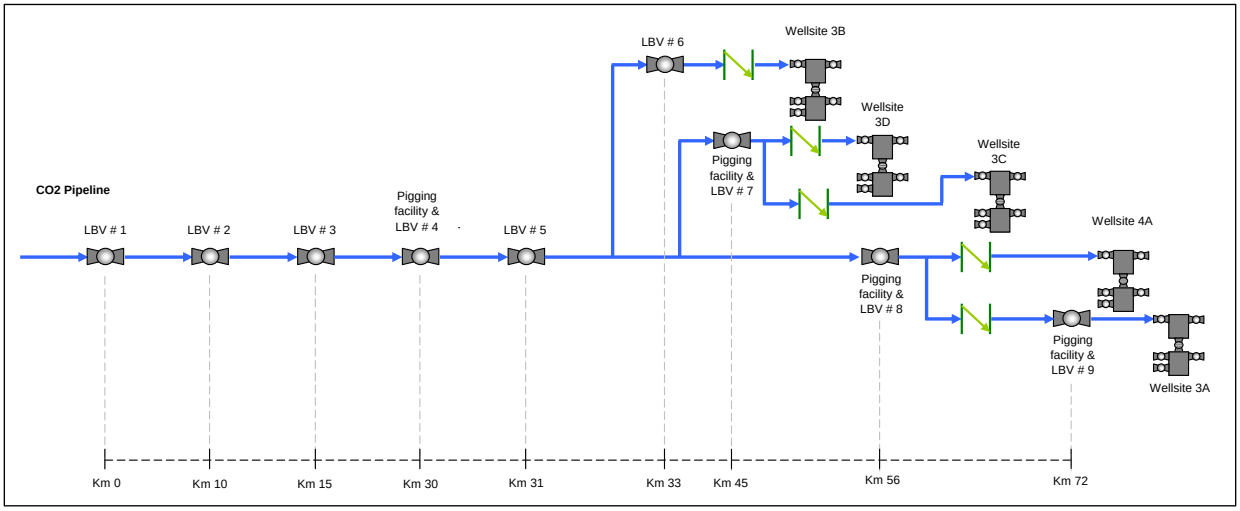

Figure 9: CO_2 Export Pipeline Section Block Flow Diagram.

For modeling purposes, the pipeline was modeled as a single line, with line break valves at approximately every 15 km. Pigging facilities are to be at every 30 km, and at the LBV station directly before the North Saskatchewan River crossing. Nevertheless, pigging launchers and receivers were not considered critical to production.

The number of injection wells for the base case is premised to be 5, and each well will be able to receive 48 tons/hr (i.e. 33% of exported CO_2). The high case is 3 injection wells, and the low case is 7 injection wells. It is envisioned that each wellsite will have a pressure/flow control valve and an ESD. Both will be able to be locally and remotely operated. The wellsites will be assumed to be located directly adjacent to the pipeline.

The monitor wells and water wells provide data about the reservoir and CO_2 plume that could impact the injection operation, but themselves do not impact the injection wells. Therefore, these were not included in the model.

The pipeline/wells sensitivity case assumed no downhole safety valve. Control equipment, such as pressure and temperature transmitters, was not modeled.

Table 6-10: CO_2 Export Pipeline Section Equipment

Equipment	Tag ID	Configuration	Comment
Ball Valve ESD	LBV #1	1×100%	Located at Km 0, affects all wellsites
Ball Valve #2	LBV #2	1×100%	Located at Km 10, affects all wellsites
Ball Valve #3	LBV #3	1×100%	Located at Km 15, affects all wellsites
Ball Valve #4	LBV #4	1×100%	Located at Km 30 (before the river), affects all wellsites
Ball Valve #5	LBV #5	1×100%	Located at Km 30 (after the river), affects all wellsites
Ball Valve #6	LBV #6	1×100%	Located at Km 33, only affects wellsite 3B
Ball Valve #7	LBV #7	1×100%	Located at Km 45, only affects wellsites 3C and 3D
Ball Valve #8	LBV #8	1×100%	Located at Km 56, only affects wellsites 3A and 4A
Ball Valve #9	LBV #9	1×100%	Located at Km 72, only affects wellsite 3A
Pipeline		1×100%	Segment of pipeline of 30 kms that affects all wellsites
Wellsites 3A/B/C/D and 4A		5×33%	Each wellsite is comprised of a FCV, an ESD, and a Christmas tree.

Pipeline segments were modeled to connect the valves listed in Table 6-10, with a mean time to failure of 3.2×10^{-4} per km/year, and 5 days of downtime for repairs.

6.5.1 Scheduled Well Shutdowns

Scheduled well maintenance is as follows:

Table 6-11: Well Scheduled Maintenance

Activity	Frequency (yrs)	Duration (hrs)	Comments
Annual pressure test	1	36	Duration includes ramp-up time
Short-term planned maintenance	1	24	Expected to include having to pull segments out. Scheduled to coincide with annual pressure test and reduce ramp-up periods
Long-term planned shutdowns	5	132	Wells will be staggered so that one well will be taken down each year. Duration includes ramp-up time.

As a general philosophy, planned shutdowns of the wells were modeled not to be coincident.

6.5.2 Pigging

Pigging of the export pipeline was not expected to have a significant impact on production, and therefore, was not included in the model.

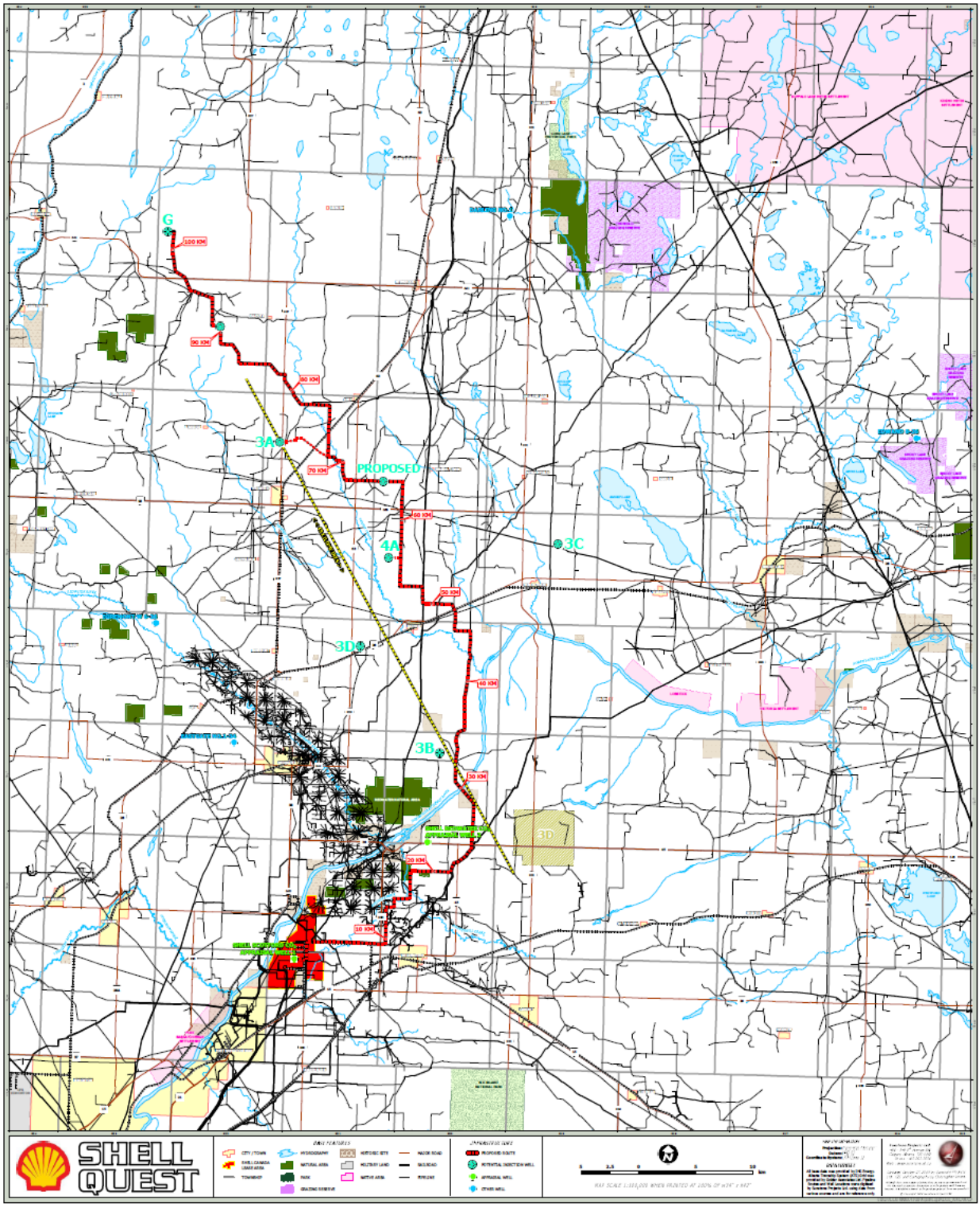

Figure 10: Map of the CO_2 Export Pipeline and location of Injection Wells.

The table below shows the failure data that are proposed for the equipment in the CO_2 Capture System including Export Pipeline and Injection Wells sensitivity model.

Table 6-12: Failure Data for the CO_2 Export Pipeline Section

CO_2 Export Pipeline System Equipment	Tag ID	Failure Mode	MTTF (Years)	MTTR (hrs)		Impact on Equipment	Annual equivalent downtime	Source
			Years	Min	Max	%	hours	
Wellsite 3A		Tree Repair – Rig	600.0	360.0		100%	0.6	Previous Studies
		Tubes – Rig	80.0	360.0		100%	4.5	Previous Studies
		Packer Leak – Rig	1000.0	360.0		100%	0.4	Previous Studies
		Misc – Rig	420.0	360.0		100%	0.9	Previous Studies
		Tree Repair – Wireline	600.0	240.0		100%	0.4	Previous Studies
		Tubing Leak– Wireline	80.0	240.0		100%	3.0	Previous Studies
		Packer Leak – Wireline	1000.0	240.0		100%	0.2	Previous Studies
		Control Logic Failure	3.1	8.0		100%	2.6	Previous Studies
		ESD Failure	2.7	15.0		100%	5.6	Previous Studies
Wellsite 3B		Tree Repair – Rig	600.0	360.0		100%	0.6	Previous Studies
		Tubes – Rig	80.0	360.0		100%	4.5	Previous Studies
		Packer Leak – Rig	1000.0	360.0		100%	0.4	Previous Studies
		Misc – Rig	420.0	360.0		100%	0.9	Previous Studies
		Tree Repair – Wireline	600.0	240.0		100%	0.4	Previous Studies
		Tubing Leak– Wireline	80.0	240.0		100%	3.0	Previous Studies
		Packer Leak – Wireline	1000.0	240.0		100%	0.2	Previous Studies
		Control Logic Failure	3.1	8.0		100%	2.6	Previous Studies
		ESD Failure	2.7	15.0		100%	5.6	Previous Studies
Wellsite 3C		Tree Repair – Rig	600.0	360.0		100%	0.6	Previous Studies
		Tubes – Rig	80.0	360.0		100%	4.5	Previous Studies
		Packer Leak – Rig	1000.0	360.0		100%	0.4	Previous Studies
		Misc – Rig	420.0	360.0		100%	0.9	Previous Studies
		Tree Repair – Wireline	600.0	240.0		100%	0.4	Previous Studies
		Tubing Leak– Wireline	80.0	240.0		100%	3.0	Previous Studies
		Packer Leak – Wireline	1000.0	240.0		100%	0.2	Previous Studies
		Control Logic Failure	3.1	8.0		100%	2.6	Previous Studies
		ESD Failure	2.7	15.0		100%	5.6	Previous Studies
Wellsite 3D		Tree Repair – Rig	600.0	360.0		100%	0.6	Previous Studies
		Tubes – Rig	80.0	360.0		100%	4.5	Previous Studies

CO_2 Export Pipeline System Equipment	Tag ID	Failure Mode	MTTF (Years)	MTTR (hrs)		Impact on Equipment	Annual equivalent downtime	Source
			Years	Min	Max	%	hours	
		Packer Leak – Rig	1000.0	360.0		100%	0.4	Previous Studies
		Misc – Rig	420.0	360.0		100%	0.9	Previous Studies
		Tree Repair – Wireline	600.0	240.0		100%	0.4	Previous Studies
		Tubing Leak– Wireline	80.0	240.0		100%	3.0	Previous Studies
		Packer Leak – Wireline	1000.0	240.0		100%	0.2	Previous Studies
		Control Logic Failure	3.1	8.0		100%	2.6	Previous Studies
		ESD Failure	2.7	15.0		100%	5.6	Previous Studies
Wellsite 4A		Tree Repair – Rig	600.0	360.0		100%	0.6	Previous Studies
		Tubes – Rig	80.0	360.0		100%	4.5	Previous Studies
		Packer Leak – Rig	1000.0	360.0		100%	0.4	Previous Studies
		Misc – Rig	420.0	360.0		100%	0.9	Previous Studies
		Tree Repair – Wireline	600.0	240.0		100%	0.4	Previous Studies
		Tubing Leak– Wireline	80.0	240.0		100%	3.0	Previous Studies
		Packer Leak – Wireline	1000.0	240.0		100%	0.2	Previous Studies
		Control Logic Failure	3.1	8.0		100%	2.6	Previous Studies
		ESD Failure	2.7	15.0		100%	5.6	Previous Studies
Pipeline		Leakage	100.8	120		100%	1.2	Previous Studies

6.5.3 Pipeline/Wells Sensitivity Results

The wells were assumed to have sufficient overcapacity that the configuration was essentially 5x33%. The availability of each wellsite is ~99%, but the excess capacity from other wells provides full redundancy (we would only see effect on CO2 capture system if 3 out of 5 wells are down at the same time, which is unlikely). The pipeline also has a reliability of close to 100%. Thus, the pipeline and wells were found not to contribute significantly to downtime of the CO_2 capture system.

6.6 2x50% and 2 x 100% Spared Compressors (Sensitivity 5) – Design Class 3

As the compressor system was one of the principal contributors to downtime, Sensitivity 5 considered the case of 2 spared compressor trains, rather than the single compressor in the Base Case. This compressor sparing change was made to the Alternate Equipment Configuration (Sensitivity 3).

With 2x50% compressors, the average efficiency of CO_2 exported to pipeline is 97.9%. This is 2.4% higher than the Base Case and 0.3% higher than the Sensitivity 3 with unspared compressor. The average supply efficiency loss of 2.1% is equivalent to 7.7 days downtime per annum. The CO_2 supply to the export pipeline is at maximum capacity for 96.1% of the time, equivalent to 350.9 days per annum.

Table 6-13: Sensitivity 5 Results Summary

CO2 Capture System Parameters	Sensitivity	Base Case	Delta
Average CO2 Production Efficiency	97.9% +/-0.1%	95.5% +/-0.2%	2.4%
	357.3 days	348.7 days	8.6 days
Average Production Losses	2.1%	4.5%	-2.4%
	7.7 days	16.3 days	-8.6 days
Period during which maximum capacity is available	96.1%	92.6%	3.6%
	350.9 days	337.9 days	13 days

The case of 2x100% spared compressor trains was also considered. The average efficiency of CO_2 exported to pipeline in this case increased to 99.2%, which are 3.6% higher than the Base Case and 1.5% higher than the Sensitivity 3 with unspared compressor. The average supply efficiency loss of 0.8% is equivalent to 3.1 days downtime per year. The CO_2 supply to the export pipeline is at maximum capacity for 98.7% of the time, equivalent to 360.1 days per annum.

Table 6-14: 2x100% Compressors Results Summary

CO2 Capture System Parameters	Sensitivity	Base Case	Delta
Average CO2 Production Efficiency	99.2% +/-0.1%	95.5% +/-0.2%	3.6%
	361.9 days	348.7 days	13.2 days
Average Production Losses	0.8%	4.5%	-3.6%
	3.1 days	16.3 days	-13.2 days
Period during which maximum capacity is available	98.7%	92.6%	6.1%
	360.1 days	337.9 days	22.2 days

6.7 Lean Amine Only Case (Sensitivity 6) – Low CAPEX Case

The final sensitivity case was a low-Capex case, in which some of the semi-lean system equipment was eliminated from the system. The changes for this case were also made to Sensitivity 3.

For this Lean-Amine Only Case, the average efficiency of CO_2 exported to pipeline was 97.7%. This is 2.2% higher than the Base Case and 0.1% higher than the Sensitivity 3 case. The average supply efficiency loss of 2.3% is equivalent to 8.4 days downtime per annum. The CO_2 supply to the export pipeline is at maximum capacity for 97.0% of the time, equivalent to 354 days per annum.

Table 6-15: Sensitivity 6 Results Summary

CO2 Capture System Parameters	Sensitivity	Base Case	Delta
Average CO2 Production Efficiency	97.7% +/-0.1%	95.5% +/-0.2%	2.2%
	356.6 days	348.7 days	7.9 days
Average Production Losses	2.3%	4.5%	-2.2%
	8.4 days	16.3 days	-7.9 days
Period during which maximum capacity is availa	97.0%	92.6%	4.4%
	354 days	337.9 days	16.1 days

Appendix A. CO_2 Capture System Reliability Block Diagram

Appendix A contains the detailed reliability block diagram for the CO_2 Capture system:

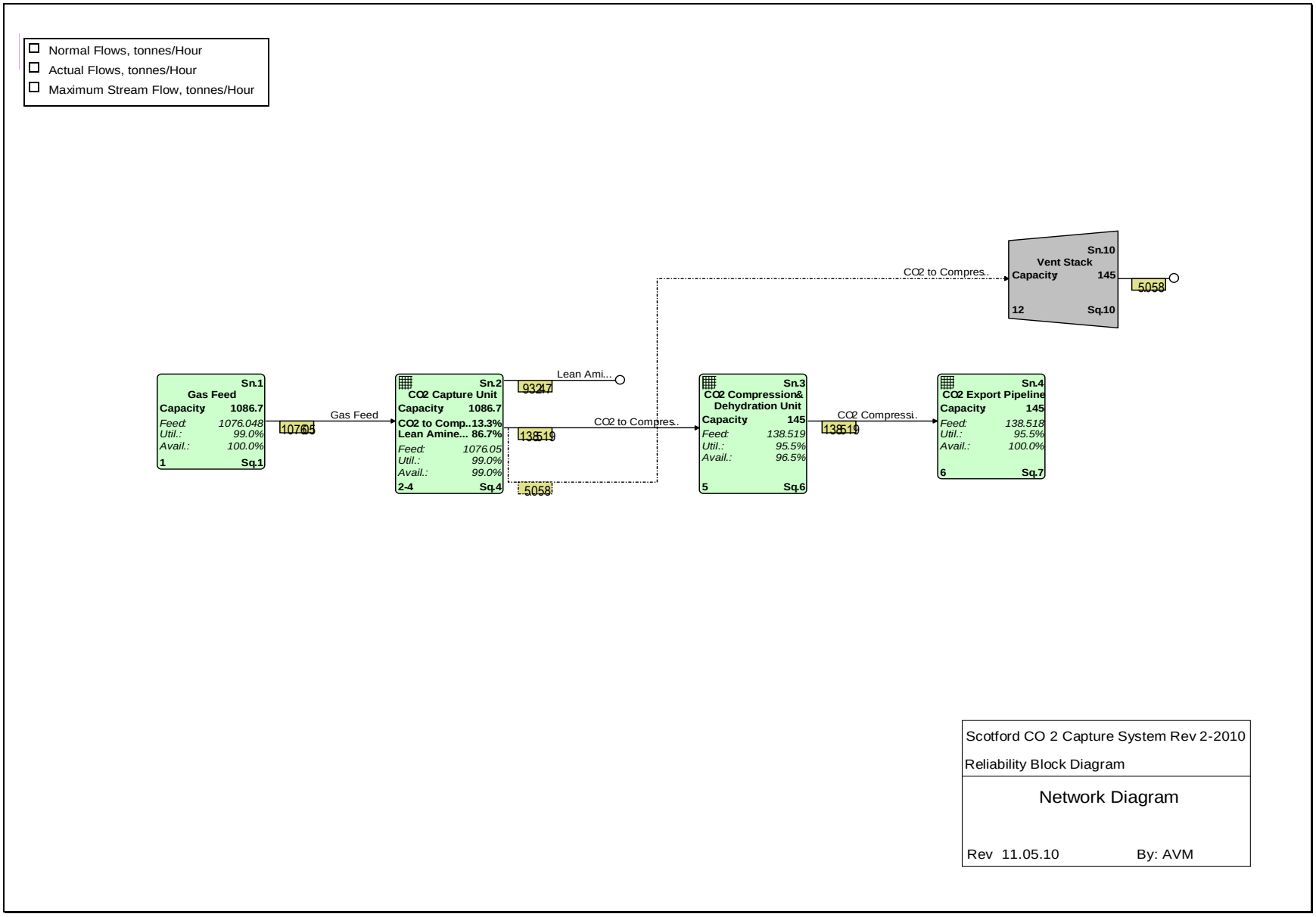
Normal Flows, tonnes/Hour
Actual Flows, tonnes/Hour
Maximum Stream Flow, tonnes/Hour
Sn.1
Gas Feed
Capacity 1086.7
Feed: 1076.048
Util.: 99.0%
Avail.: 100.0%
1 Sq.1
1076.05
Gas Feed
Sn.2
CO2 Capture Unit
Capacity 1086.7
CO2 to Comp.. 13.3%
Lean Amine... 86.7%
Feed: 1076.05
Util.: 99.0%
Avail.: 99.0%
2-4 Sq.4
Lean Ami...
93.247
138.519
5058
CO2 to Compres..
Sn.3
CO2 Compression& Dehydration Unit
Capacity 145
Feed: 138.519
Util.: 95.5%
Avail.: 96.5%
5 Sq.6
138.519
CO2 Compressi..
Sn.4
CO2 Export Pipeline
Capacity 145
Feed: 138.518
Util.: 95.5%
Avail.: 100.0%
6 Sq.7
CO2 to Compres..
Sn.10
Vent Stack
Capacity 145
12 Sq.10
5058
Scotford CO 2 Capture System Rev 2-2010
Reliability Block Diagram
Network Diagram
Rev 11.05.10
By: AVM

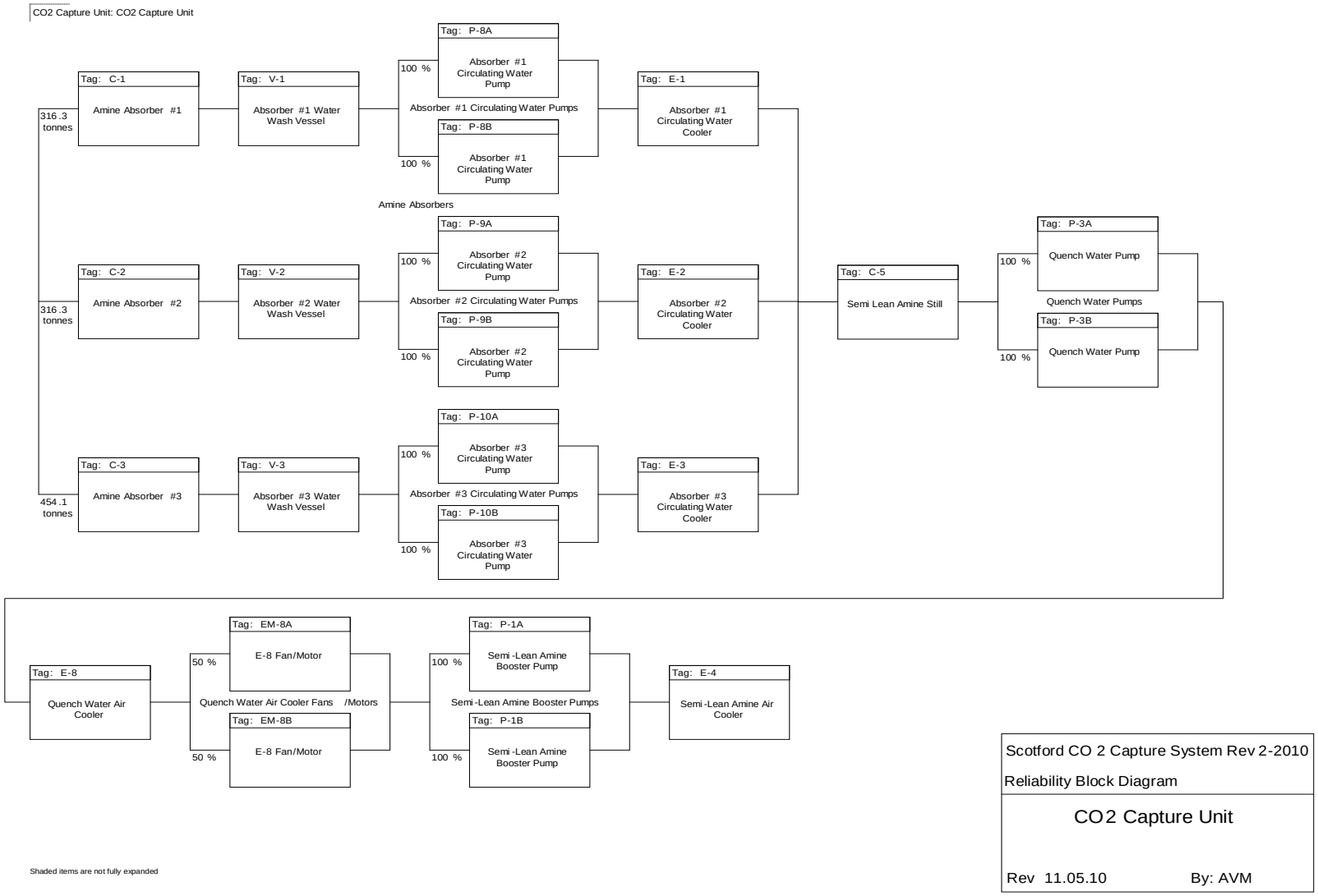
CO2 Capture Unit: CO2 Capture Unit
Tag: C-1
Amine Absorber #1
316.3 tonnes
Tag: V-1
Absorber #1 Water Wash Vessel
Tag: P-8A
Absorber #1 Circulating Water Pump
100 %
Absorber #1 Circulating Water Pumps
Tag: P-8B
Absorber #1 Circulating Water Pump
100 %
Tag: E-1
Absorber #1 Circulating Water Cooler
Amine Absorbers
Tag: C-2
Amine Absorber #2
316.3 tonnes
Tag: V-2
Absorber #2 Water Wash Vessel
Tag: P-9A
Absorber #2 Circulating Water Pump
100 %
Absorber #2 Circulating Water Pumps
Tag: P-9B
Absorber #2 Circulating Water Pump
100 %
Tag: E-2
Absorber #2 Circulating Water Cooler
Tag: C-3
Amine Absorber #3
454.1 tonnes
Tag: V-3
Absorber #3 Water Wash Vessel
Tag: P-10A
Absorber #3 Circulating Water Pump
100 %
Absorber #3 Circulating Water Pumps
Tag: P-10B
Absorber #3 Circulating Water Pump
100 %
Tag: E-3
Absorber #3 Circulating Water Cooler
Tag: C-5
Semi Lean Amine Still
Tag: P-3A
Quench Water Pump
100 %
Quench Water Pumps
Tag: P-3B
Quench Water Pump
100 %
Tag: E-8
Quench Water Air Cooler
Tag: EM-8A
E-8 Fan/Motor
50 %
Quench Water Air Cooler Fans /Motors
Tag: EM-8B
E-8 Fan/Motor
50 %
Tag: P-1A
Semi-Lean Amine Booster Pump
100 %
Semi-Lean Amine Booster Pumps
Tag: P-1B
Semi-Lean Amine Booster Pump
100 %
Tag: E-4
Semi-Lean Amine Air Cooler
Shaded items are not fully expanded
Scotford CO 2 Capture System Rev 2-2010
Reliability Block Diagram
CO2 Capture Unit
Rev 11.05.10
By: AVM

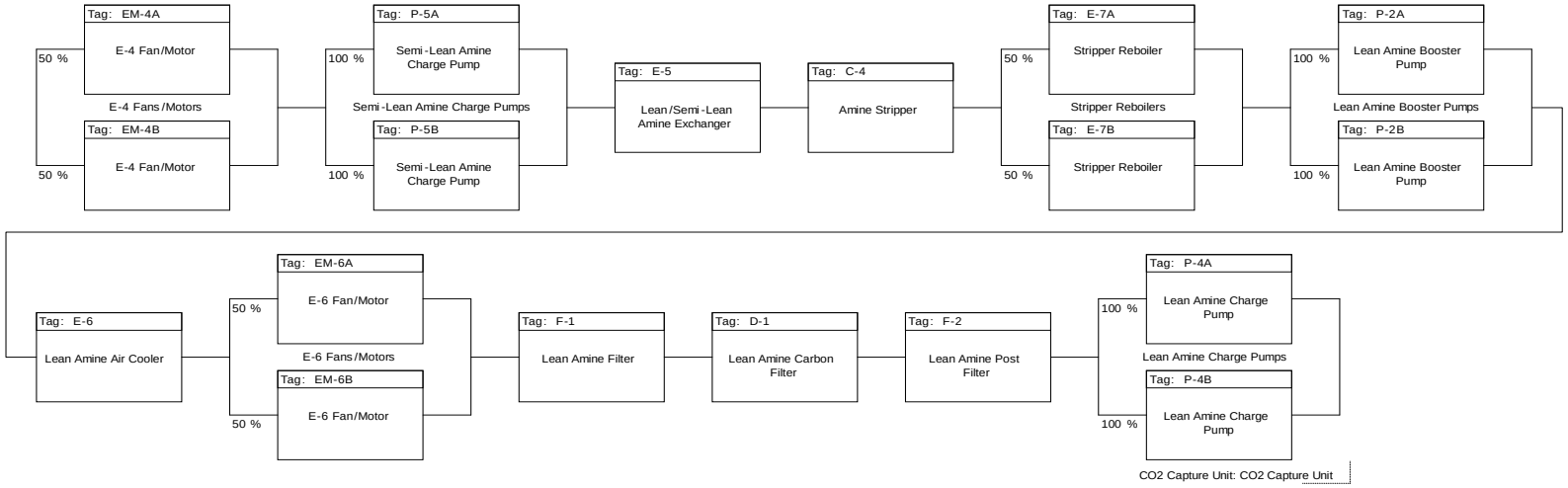

Shaded items are not fully expanded

Scotford CO 2 Capture System Rev 2-2010

Reliability Block Diagram

CO2 Capture Unit

Rev 11.05.10 By: AVM

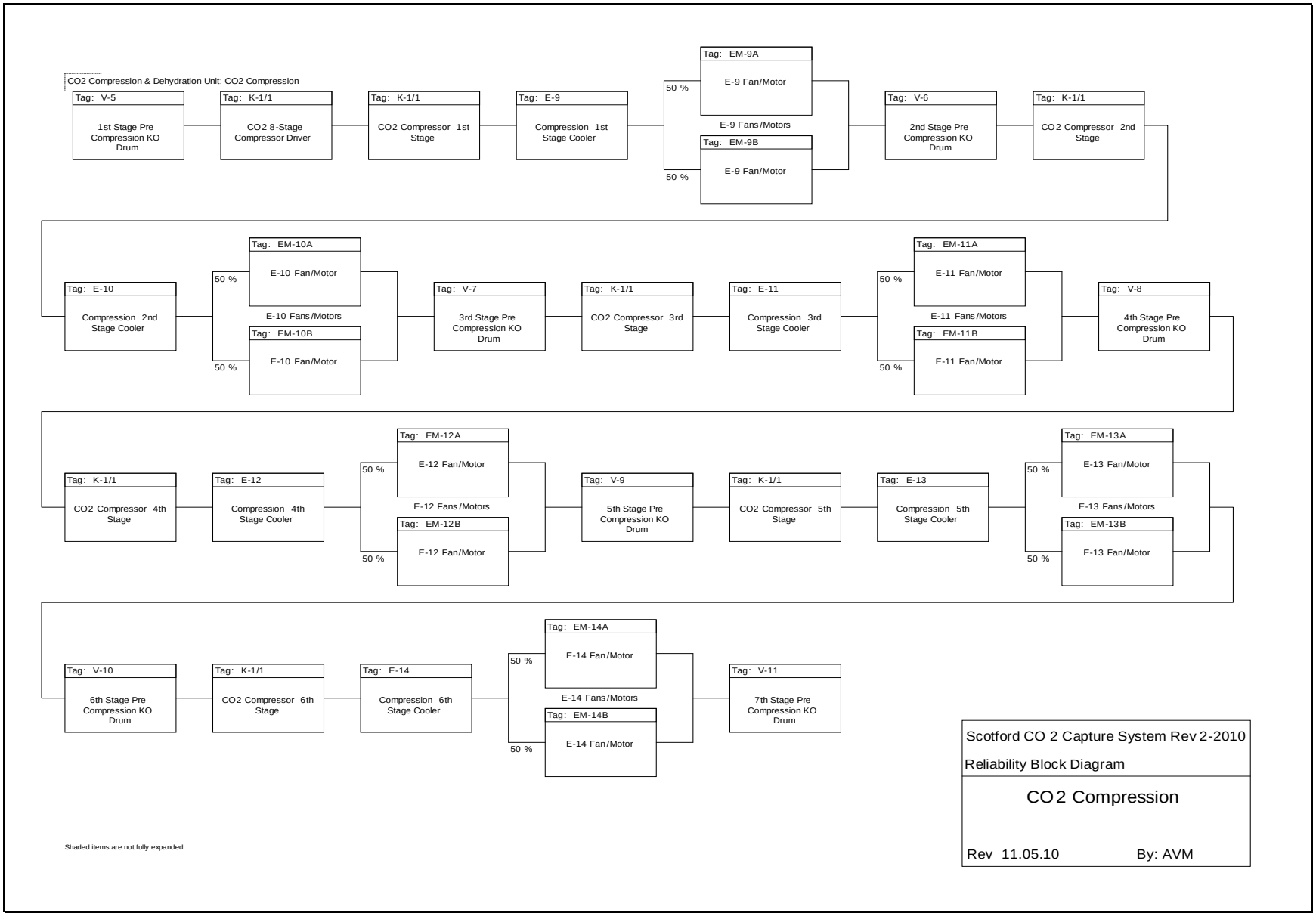
CO2 Compression & Dehydration Unit: CO2 Compression
Tag: V-5
1st Stage Pre Compression KO Drum
Tag: K-1/1
CO2 8-Stage Compressor Driver
Tag: K-1/1
CO2 Compressor 1st Stage
Tag: E-9
Compression 1st Stage Cooler
50 %
Tag: EM-9A
E-9 Fan/Motor
E-9 Fans/Motors
Tag: EM-9B
E-9 Fan/Motor
50 %
Tag: V-6
2nd Stage Pre Compression KO Drum
Tag: K-1/1
CO2 Compressor 2nd Stage
Tag: E-10
Compression 2nd Stage Cooler
50 %
Tag: EM-10A
E-10 Fan/Motor
E-10 Fans/Motors
Tag: EM-10B
E-10 Fan/Motor
50 %
Tag: V-7
3rd Stage Pre Compression KO Drum
Tag: K-1/1
CO2 Compressor 3rd Stage
Tag: E-11
Compression 3rd Stage Cooler
50 %
Tag: EM-11A
E-11 Fan/Motor
E-11 Fans/Motors
Tag: EM-11B
E-11 Fan/Motor
50 %
Tag: V-8
4th Stage Pre Compression KO Drum
Tag: K-1/1
CO2 Compressor 4th Stage
Tag: E-12
Compression 4th Stage Cooler
50 %
Tag: EM-12A
E-12 Fan/Motor
E-12 Fans/Motors
Tag: EM-12B
E-12 Fan/Motor
50 %
Tag: V-9
5th Stage Pre Compression KO Drum
Tag: K-1/1
CO2 Compressor 5th Stage
Tag: E-13
Compression 5th Stage Cooler
50 %
Tag: EM-13A
E-13 Fan/Motor
E-13 Fans/Motors
Tag: EM-13B
E-13 Fan/Motor
50 %
Tag: V-10
6th Stage Pre Compression KO Drum
Tag: K-1/1
CO2 Compressor 6th Stage
Tag: E-14
Compression 6th Stage Cooler
50 %
Tag: EM-14A
E-14 Fan/Motor
E-14 Fans/Motors
Tag: EM-14B
E-14 Fan/Motor
50 %
Tag: V-11
7th Stage Pre Compression KO Drum
Shaded items are not fully expanded
Scotford CO 2 Capture System Rev 2-2010
Reliability Block Diagram
CO2 Compression
Rev 11.05.10
By: AVM

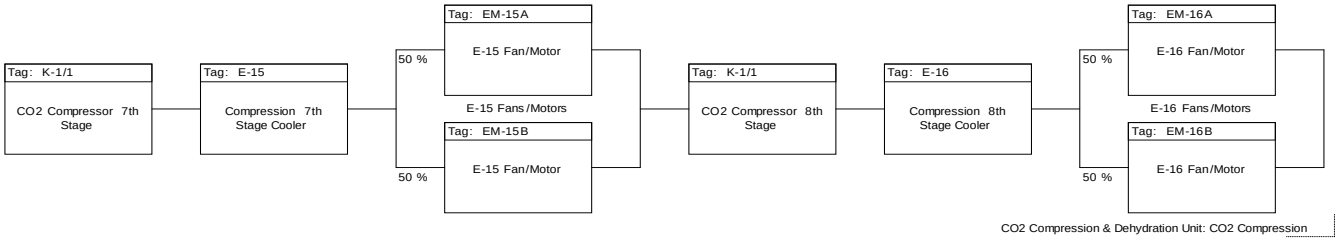

Shaded items are not fully expanded

Scotford CO 2 Capture System Rev 2-2010

Reliability Block Diagram

CO 2 Compression

Rev 11.05.10 By: AVM

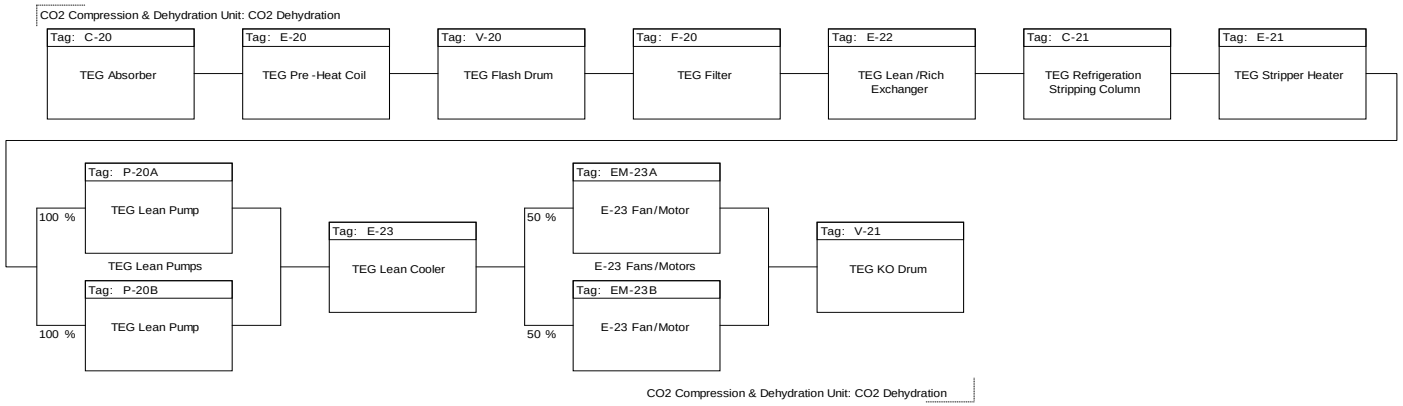

Shaded items are not fully expanded

Scotford CO 2 Capture System Rev 2-2010

Reliability Block Diagram

CO 2 Dehydration

Rev 11.05.10 By: AVM CHK :

Bibliographic Information

This report has been classified as Confidential and is subject to US Export Control regulations and has been classified as ECCN EAR 99.

Report Number	:	GS.10.52419	
Title	:	Quest CCS Project RAM Study – Final Report	
Author(s)	:	R.M. Stephens	PTE/AOEX
Verified by	:	C.E. White	PTE/EOEX
Approved by	:	R.W. Daniel	PTE/AOEX
Content Owner	:	R.M. Stephens	PTE/AOEX
Issue Date	:	September 2010	
Activity Code	:	ZZPT/006964/01	
Sponsor	:	Jeffrey Leontowich	
Keywords	:	reliability modeling, reliability, availability, maintainability, capacity utilization	
Electronic file	:	GS.10.52419.pdf	
Issuing Company	:	Shell Global Solutions (US) Inc. Westhollow Technology Center, P.O. Box 4327, Houston, TX 77210, USA. Tel. +1 281 544 8844	

Report distribution

Outside Shell Global Solutions

Company name and address	
J. Leontowich, SCAN-PTM/APCA, CAL-SC SC-1570B	E
S. Peplinski, SCAN-PTM/APCA, CAL-SC SC-1572B	E

Within Shell Global Solutions

Name	Ref. Ind.	Location	
R.M. Stephens	PTE/AOEX	HOU-WTC MF 150	E
C.E. White	PTE/EOEX	RIJ-KES Ak-446AA	E
R.W. Daniel	PTE/AOEX	HOU-WTC MF-150	E

This report can be freely shared with all Shell Global Solutions employees.